629.27
S85 a

629.28
S85t a

11-28- Smith 1,07

PRINTED IN GREAT BRITAIN
AT THE PITMAN PRESS, BATH

Copyright Wat Tyler 1973

PREFACE

THIS book describes how to accomplish the various manoeuvres known as " stunt " flying, or aerobatics, which are made use of not only as providing a spectacle at aerial displays, but also in warfare and in cases of emergency such as sudden engine failure when it may be necessary to effect a safe landing in a confined space.

The illustrations show machines actually performing various " evolutions," while the diagrams in the Appendix, giving the control movements for each evolution, have been specially prepared for the information of readers who may wish to try.

Copyright Wal Pike 1973

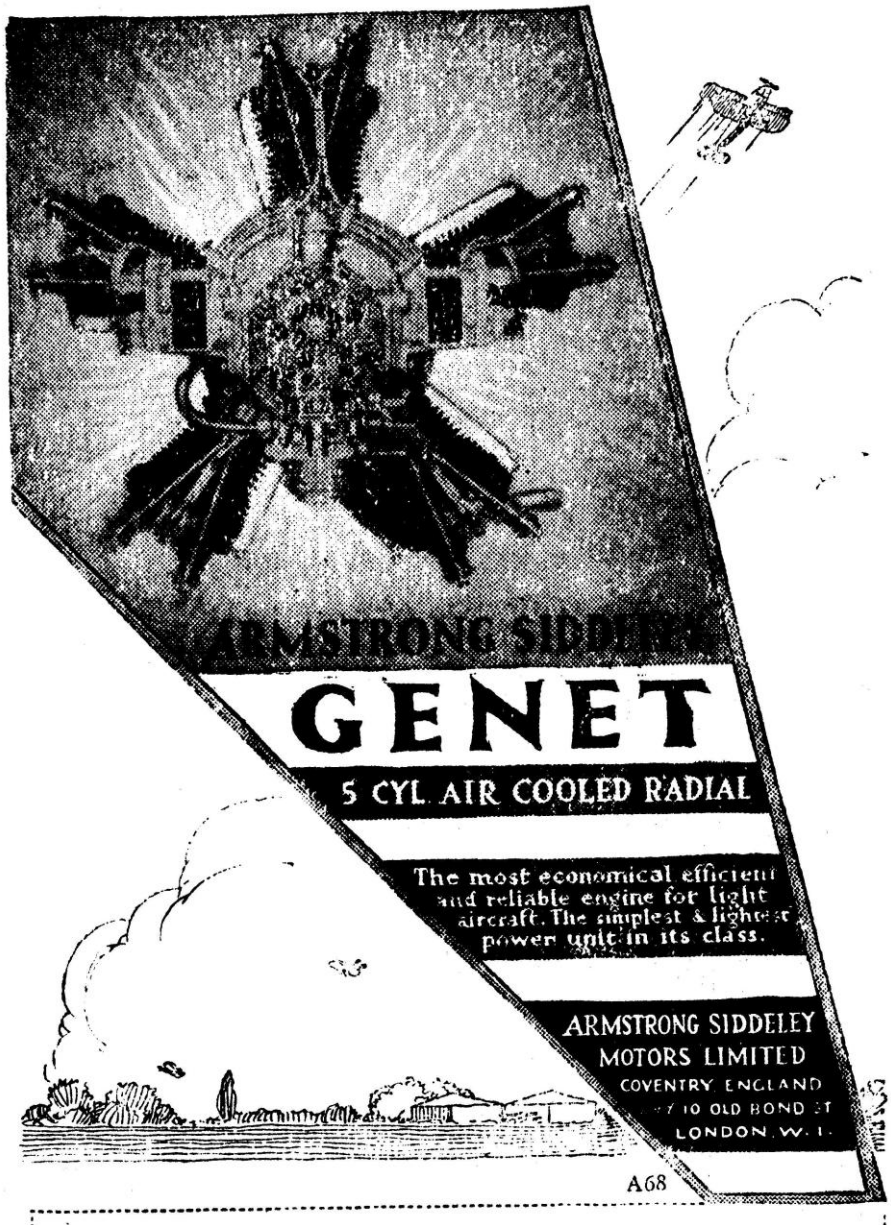
ARMSTRONG SIDDELEY
GENET
5 CYL AIR COOLED RADIAL
The most economical efficient and reliable engine for light aircraft. The simplest & lightest power unit in its class.
ARMSTRONG SIDDELEY
MOTORS LIMITED
COVENTRY ENGLAND
10 OLD BOND ST
LONDON W. 1.
A68

The WORLD'S ENDURANCE RECORD

of 60 hrs. 7 min. 32 secs. was made on a

Siddeley PUMA

engined D.H.9 by Adjutant Crooy and Sergeant Groenen

Copyright Walt Peake 1975

CONTENTS

CHAP.		PAGE
	PREFACE	V
I.	THE LOOP	I
II.	ROLLING	6
III.	SPINNING	11
IV.	FLYING UPSIDE-DOWN	15
V	THE FALLING LEAF	19
VI.	"CRAZY" FLYING	23
VII.	NEW EVOLUTIONS	27
VIII.	FUTURE EVOLUTIONS	31
IX.	AERIAL SHOWMANSHIP	35
X.	EMERGENCY AEROBATICS	39
XI.	USE OF INSTRUMENTS	44
XII.	THE FINESSE OF FLYING	49
XIII.	MACHINES	58
XIV.	THE PHYSIOLOGY OF FLYING	63

APPENDIX

DIAGRAMS OF CONTROL MOVEMENTS DURING VARIOUS MANOEUVRES		67
INDEX		75

INSETS

PLATE			
I.	CRAZY FLYING—A BE 2E WITH YOUNG IDEAS	*Frontispiece*	
II AND III.	A LOOP—A FLICK ROLL	*facing page*	16
IV ,, V.	"HANDS OFF" FLYING—STALLED	,,	32
VI ,, VII.	THE DOUBLE BUNT—A HOICK	,,	48
VIII ,, IX.	A "BOURGES" IN A SPIN—A CLIMBING TURN	,,	64

Copyright Wal Pelke 1973

PLATE I

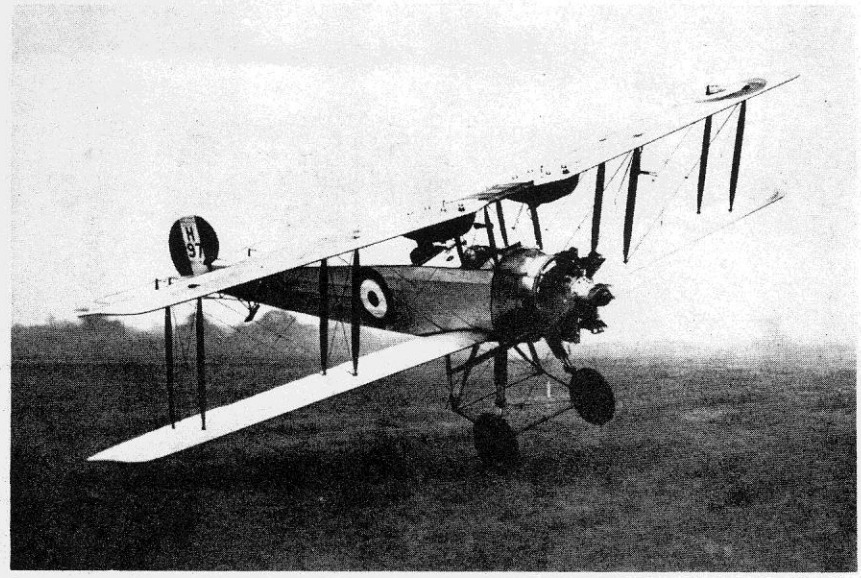

(*Flight*)

CRAZY FLYING

A remarkable picture showing a flat turn with one wheel actually running along the ground. The starboard wing tip is not more than a foot from the grass

(*Flight*)

A BE 2E WITH YOUNG IDEAS!

Crazy flying on what is believed to be the last machine of its type in service. The pilot is applying left rudder and left aileron. When their limitations are appreciated, some of the oldest type machines can be made to give excellent aerobatic performances

Frontispiece

Copyright Walt Perko 1975

ACKNOWLEDGMENTS

PART of the matter in this book appeared in article form in *Airways*, and I am indebted to the Editor of *Airways* for permission to republish it. The photographs were taken by Mr. Yoxall, who originated a specialized technique for the photography of aircraft in action. I am indebted to the Editor of *Flight* for permission to publish the photographs.

Copyright Walt Peake 1975

a

AEROBATICS

CHAPTER I

THE LOOP

AEROBATICS may be said to be the only searching test of control yet evolved. They provide a forcing house for the growth of control, just as record-breaking aids the growth of speed and climb. They are good training exercises for all pilots, and they are essential for fighting pilots. As a publicity agent for aviation they are effective and they are of great aesthetic value, for they exalt the aeroplane as an aeroplane. Whereas commercial and military progress must always demand the subjugation of the flying machine to their own particular financial and lethal ends, aerobatics cherish the flying machine itself. In other words, aerobatics (with record-breaking and racing) help to keep alive the purist's conception of the aeroplane. From the materialist's as well as the idealist's points of view, they are therefore worthy of encouragement.

Some of the most spectacular feats of aerobatics are, strangely enough, the easiest to perform, while others, achieved by only the most experienced of pilots, appear singularly uninteresting

from the ground. Easily the most popular, however, is the loop, first achieved by Pégoud in 1913.

There are three chief kinds of loop : the climbing loop, the slow loop, and the loop without engine.

THE CLIMBING LOOP. In the climbing loop, the

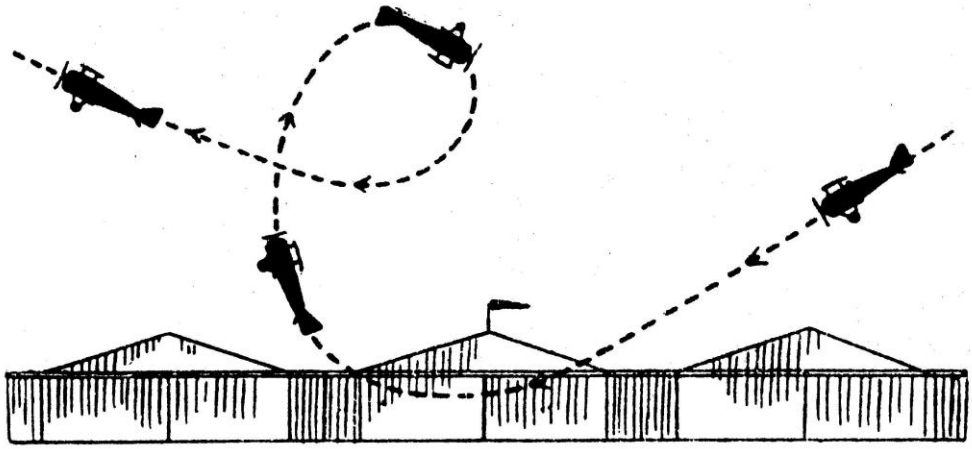

FIG. 1. A CLIMBING LOOP

machine dives with the engine partly on until it is some five or ten feet above the ground and travelling at a high speed. Then the nose is gently pointed upwards and the engine throttle is fully opened. The store of excess speed gained during the dive, allied to the pull of the engine, sends the machine shooting skywards. As it approaches the top of its climb and passes the position in which it points vertically upwards, the loop is " tightened up," and the nose brought round on a smaller and smaller radius.

Copyright Walt Peake 1979

The actual loop described is therefore fairly small, and the machine comes out of it possibly several hundred feet higher than where it started (Fig. 1).

THE SLOW LOOP. The slow loop is started at a speed probably below the full speed of the machine, according to the type of machine, and

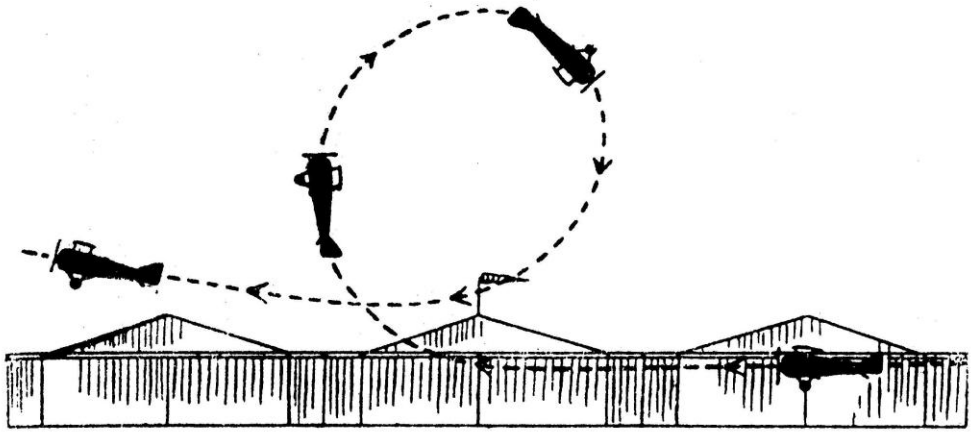

FIG. 2. A SLOW LOOP

the aeroplane describes an almost perfect circle (Fig. 2).

Correctly performed, the slow loop from nearly ground level is one of the most spectacular of evolutions. It requires a great deal of practice and it gives the pilot less chance of escape in the event of sudden engine failure just after his machine has passed the vertical position.

THE "ENGINE-OFF" LOOP. The engine-off loop has gone out of fashion. Indeed, it seems never to be done nowadays, so that it suffices to say that it is started from a high speed after a long

Copyright Walt Peake 1979

and steep dive, and during it height is invariably lost.

GENERAL REMARKS ON LOOPING. Looping, although probably the first aerobatic a pilot learns, is difficult to accomplish cleanly. There is a tendency for the novice to try to force his machine round too quickly. This results in the machine finishing the loop pointing in a different direction from that in which it started it or, sometimes, in the machine falling out sideways from the upside down position.

The climbing loop is the easiest of all. When travelling 5 or 10 ft. above the grass at perhaps 150 m.p.h. (though the actual speed depends on the type of machine), and usually, though not necessarily, into wind, the pilot eases the forward pressure on the stick and the nose rises. He gently eases the stick more and more back until, at the top of the loop, the stick is pulled in a little towards him.

The secret of good looping is to avoid trying to hurry the machine round its course. During the entire manoeuvre the pilot is ready to check any tendency for the machine to depart from its true symmetrical path with rudder or ailerons.

Most machines require an application of rudder as they go over the top of a loop, otherwise they depart from the true course and come out of the loop facing a different direction from that in which they started it. It is difficult for the pilot to

Copyright Wal Pike 1978

judge if his machine is describing accurate loops ; some pilots go on for years looping inaccurately without knowing that they are committing any fault. A friend on the ground, who knows what to look for, is useful as a critic.

It is possible for a pilot who knows a certain type of machine intimately to loop it automatically without the visual aid of horizon, ground or clouds. But automatic looping of the "eyes-shut, stick-back" variety is never without blemish. Different pilots use different methods of checking their machine's course. In looping machines varying from the *Swallow* to the *Siskin*, and including certain twin-engined machines, I found it useful to look along one wing and to watch the horizon tumbling round. With practice it is then possible to check the machine's course the whole time and to get almost any machine over accurately.

CHAPTER II

ROLLING

THERE are two varieties of the roll, the slow roll and the flick roll. The flick roll, when performed very close to the ground, is one of the most spectacular and brilliant of all aerobatics. The slow roll is more dignified and statuesque.

THE SLOW ROLL. In the slow roll the machine dives at a moderate angle with engine partly on until a high speed is attained (as in the climbing loop) ; it then starts a gradual climb and, at the same time, rolls lazily over on to its back. At this moment it is much higher than at the start. Very gradually it continues to turn over until it is right way up again and a good deal higher than at the start. The machine performs, therefore, a long, gentle switchback while at the same time rolling over sideways.

THE FLICK ROLL. In the flick roll the machine again turns over sideways but, instead of doing so gently and lazily, it does so quickly with a violent wriggle.

It flies along level and (usually) into wind at perhaps 30 to 40 miles per hour less than its maximum speed (assuming always a high performance machine with no marked peculiarities). It then suddenly flicks over in a tight corkscrew

Copyright Wal Pelke 1973

motion, the nose going up and down as it turns but the machine neither gaining nor losing much height. The engine runs at about four-fifths throttle during the whole manoeuvre, and is fully opened as the machine begins to straighten up (Fig. 3).

If the engine (as is often done) is shut off at the end of or during the roll, height will almost

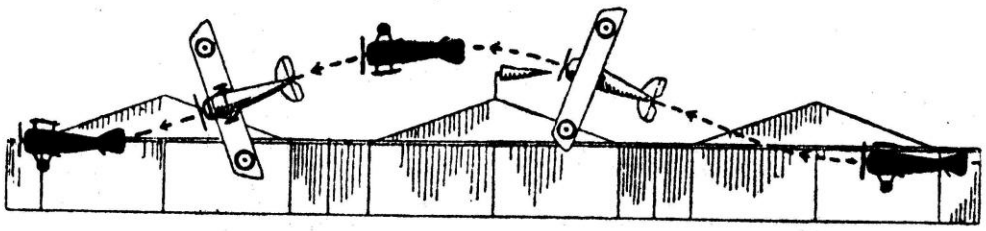

FIG. 3. THE FLICK ROLL

inevitably be lost, for the roll reduces speed to a marked extent, and as the machine concludes the manoeuvre it urgently requires an extra forward pull.

Most machines roll more readily in one direction than the other though most *can* be rolled in either direction. Some machines can be got round one-and-a-half or even two complete engine-on rolls without much loss of height.

THE HALF ROLL. In the half roll (from right-way-up position) the pilot flattens out when the machine is upside down. He can then fly along upside down (an aerobatic which will be described in another chapter) or dive out (Fig. 4). The half roll from the top of a loop brings the machine

Copyright Wal Pelke 1975

out level and facing the opposite direction to that in which the loop was begun.

FURTHER REMARKS ON THE FLICK ROLL. The pilot's technique in the flick roll is difficult and elaborate. It consists, roughly speaking, in forcing the aeroplane into a spin while it is flying horizontally. Aileron is applied first of all in the

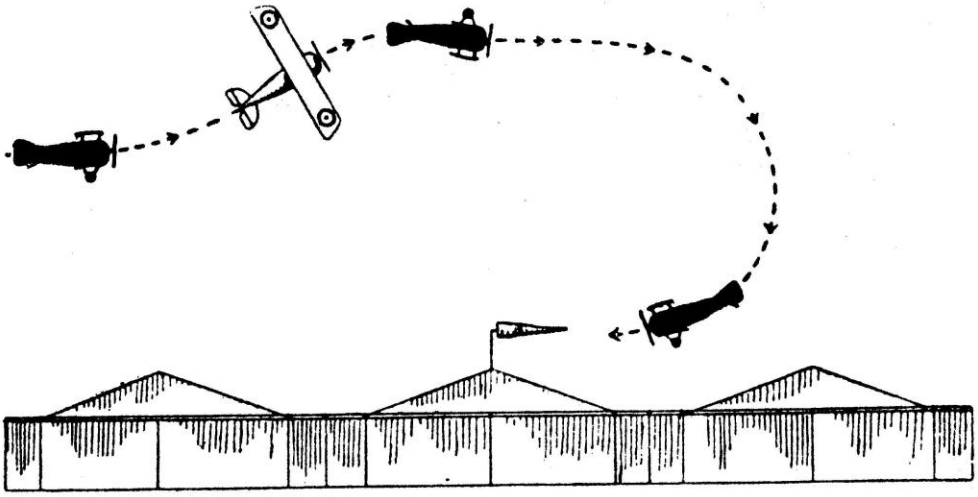

FIG. 4. THE HALF ROLL FROM LEVEL FLIGHT

direction of the roll. Then, at a rapidly increasing speed, the stick is brought back as far as it will go and simultaneously rudder is applied to the full extent. Opposite aileron is sometimes an advantage. The controls are held in this full-over position while the machine rolls, and then the rolling is checked by centralizing stick and rudder-bar.

As the controls are brought back to the rolling position, the machine will be noticed to " break "

Copyright Wal Pelke 1975

suddenly into the autorotation condition. Some aeroplanes require a good deal of firm handling before they can be induced to flick roll. They will attempt to fly round. Usually a rather more rapid movement of stick and rudder-bar will overcome this reluctance to roll.

The flick roll, being really a horizontal spin, in the middle of it the controls come almost to the position for spinning.

LOW AEROBATICS. There was a time when 500 ft. was considered a dangerously low altitude for rolling (the slow roll was not then known). This belief was prevalent when, at a home defence aerodrome near London, I first saw the late Captain Armstrong giving his *Camel* an airing, and so I received a shock such as no exhibition of aerobatics has ever given me before or since. For I believe I am right in saying that Armstrong was the first man to introduce really low aerobatics. He flew across the aerodrome, the wheels of his machine skimming the grass. Suddenly, yet without any jerk, the machine reared up, turned completely upside down without raising itself above the level of the shed roofs, and flattened out with the wheels again skimming the grass. Had there been the slightest error of judgment the machine would have struck the ground.

I do not wish to suggest that this kind of extremely low stunting is a good thing. But

Copyright Wal Pelke 1973

when the pilot appears who has studied aerobatics carefully and scientifically, and who rolls low because he believes that, for him, such a manoeuvre is safe, then it is impossible not to admire the perfection of his flying technique.

Copyright Wal Pike 1975

CHAPTER III

SPINNING

THE SENSATIONS OF SPINNING. Imagine a spiral chute from the top to the bottom of the new 200-ft. airship mooring mast at Cardington, and about as steep as the side of a cliff. Imagine yourself lying on your face and going down head first.

The sensation you experience will be similar to that experienced by a passenger in some steady old aeroplane during a couple of gentle turns of a slow spin.

BEGINNING A SPIN. When a machine is about to do a spin it first obtains sufficient height. Then its engine is throttled down, but instead of the aeroplane's nose going down in a glide, the nose goes up and the aeroplane decelerates. It seems to hesitate, then one wing tip falls with a rush, and the nose comes round as if it wanted to have a snap at the tail plane.

Thereafter the machine is spinning (Fig. 5). The pilot watches the fields going round below him. He is pressed into his seat a little more than in level flight. He holds the control stick full back and to one side while the rudder-bar is full over to the other side. So long as the pilot holds the controls in these positions the machine will continue to spin.

Copyright Wal Pcike 1973

"FLATTENING OUT." Having decided to flatten out facing the aerodrome, the pilot notes that, say, the field with the haystack is in that direction (for it is difficult to catch sight of the aerodrome

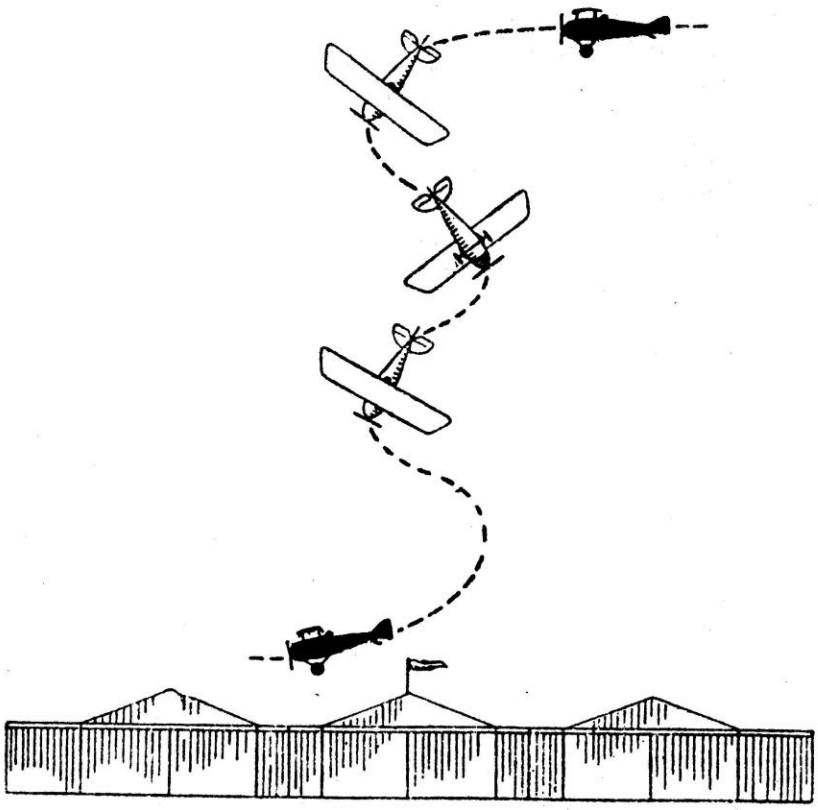

FIG. 5. A SPIN

itself during the spin). As the field comes round for the tenth time he gently begins to put both controls central. The field goes by—a little more slowly than before—and the pilot continues to move the controls. By the time the field is round for the eleventh time the machine has stopped spinning and is in a dive.

It is important that a pilot should have complete control during a spin, and should be able to flatten out facing any required direction. A pilot who cannot flatten out in exactly the direction he wants has not yet learnt how to spin.

Machines fitted with Handley-Page automatic slots are extremely difficult to spin ; indeed, some can never be made to carry out a prolonged spin, for they immediately go into a fast spiral.

CONVERTING A FLICK ROLL INTO A SPIN. A spin can be made to grow out of a flick roll. I pointed out in the chapter on rolling that the flick roll is nothing other than a horizontal spin. The final position of the controls in the flick roll and the spin is almost the same. In connecting the two manoeuvres, therefore, the pilot rolls the machine twice and, instead of flattening out, continues to hold the controls full over and shuts off the engine. The nose then drops and the roll automatically becomes a spin.

THE INVERTED SPIN. Inverted spinning is executed from the upside-down position, the control positions are reversed, and the pilot's head, instead of being inside the corkscrew course which the machine traces, is outside it. Many machines are difficult to hold in an inverted spin.

SPINNING IN NEW TYPES OF MACHINES. The first spin in a new type of machine is always a minor adventure, for it is impossible to foretell exactly how it will behave. Twice the writer had

Copyright Wal Pelke 1973

difficulty in getting machines out of spins. One machine was a small experimental pusher scout, the other was a *Bat Bantam* Both spun fairly fast, and in both cases hard opposite rudder and stick full forward failed to check the spin. A burst of engine finally stopped it. There is little doubt, however, that if the engine had not pulled the machine out it would have been possible, as there was plenty of height, to check the spin by some violent use of the controls.

One hint must now be added for the passenger. If you have a proper respect for your breakfast never attempt to look up during a spin. The ground, while it is whizzing round, may not appear attractive—but the sky is actively offensive.

Copyright Wal Pcike 1973

CHAPTER IV

FLYING UPSIDE-DOWN

FLYING APTITUDE. The Americans have an apparatus for testing the aptitude of flying pupils which consists in a chair so mounted that it can be swung or tilted to any angle and even inverted.

Strapped into this chair, the pupil is whirled round, twisted and turned in a hundred frisks, *demi-pommads*, flip-flaps, backward somersaults, *sautes de lion*, *rondades*, gambols and *rigodons*. Apparently his aptitude for flying is judged by his degree of subsequent dizziness.

The employment of this apparatus is, no doubt, interesting to the grave examiners who operate it, but, unlike the reaction apparatus and blood-pressure tests used in the Royal Air Force, it cannot extract the least information about a pupil's aptitude for flying. right!

For the aerobatic pilot accustoms himself to unusual positions and to having unusual forces acting upon his body by practice. The first time he flies upside down he will be slightly uncomfortable, and he will not be able to hold that attitude for long. In time he becomes so used to it that he can turn his machine and manoeuvre it with almost as much comfort as in normal flight.

HOLDING-IN STRAPS. When upside down the

Copyright Wal Pelke 1975

pilot's weight is borne by the shoulder straps. The belt, which for years was the standard issue on most aircraft, is about as effective for upside-down flying as a tin-opener, with which instrument it has much in common. For free manoeuvring while inverted, Sutton straps may be used. So far as I am aware, no better form of holding-in device has been invented. The straps should be secured to the longerons (seat bearers have been known to fail), and should be adjusted as tightly as possible over the thighs and shoulders.

It should be impossible for the pilot to lift from his seat or foi his hips to slide forward.

METHODS OF BEGINNING UPSIDE-DOWN FLIGHT. The simplest and quietest way to start upside-down flying is to half-roll on to the back. Immediately the ground is seen " above " the head the controls are straightened out and a gliding angle (which will be much steeper than in normal flight) is set. If the machine falls out of the upside-down position it is a certain indication that the gliding angle was insufficiently steep. Upside-down, engine-on flights can be made after the pilot has accustomed himself to gliding, and turns and spirals follow.

Contrary to a common belief, there is little difficulty in gauging the machine's attitude in inverted flight, although at first one is apt to be rather harsh on the controls.

A slight effort of will is required to hold the

Copyright Wal Pelke 1973

PLATE II

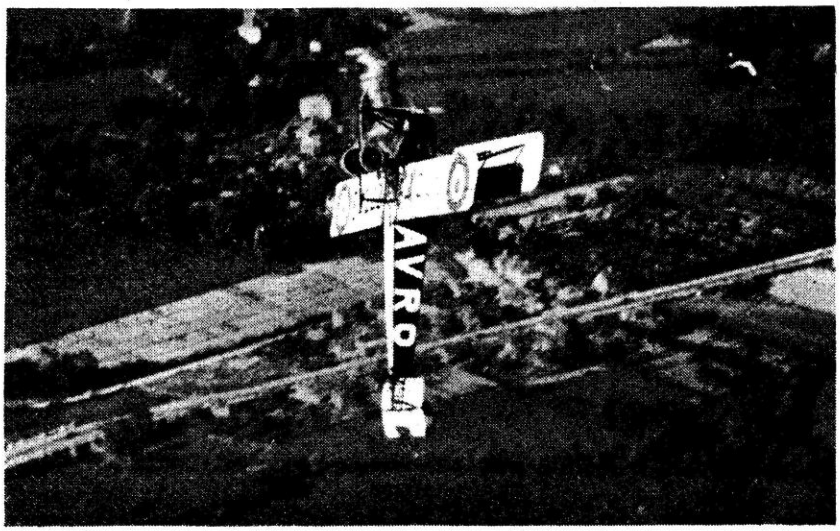

(*Flight*)

A Loop (A)

An Avro during the first part of a loop. From the position of the elevators it can be seen that the stick has been pulled only part of the way back

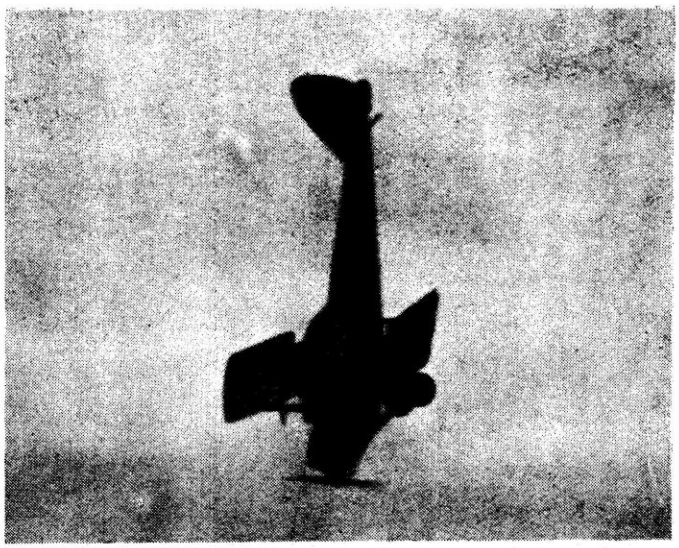

(*Flight*)

A Loop (B)

A Moth diving out after a loop

Copyright Walt Peake 1975

PLATE III

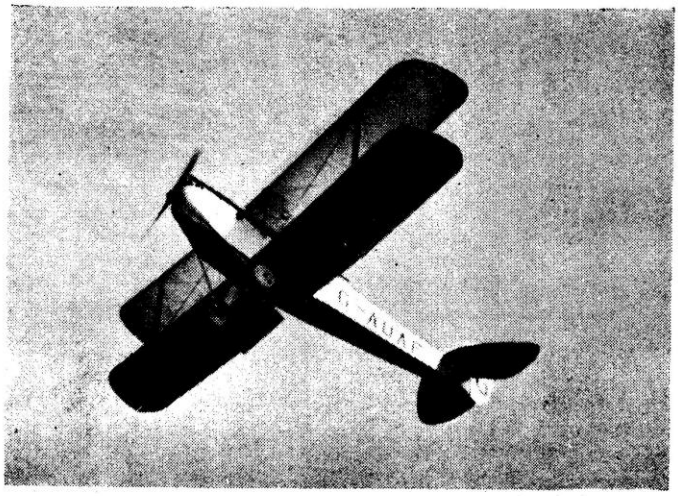

(*Flight*)

A Flick Roll (A)

A Moth beginning a flick roll. The rudder can be seen half over and the ailerons half over

A Flick Roll (B)

The middle of a flick roll. The pilot has applied opposite aileron. This is not always necessary, but it may accelerate the roll

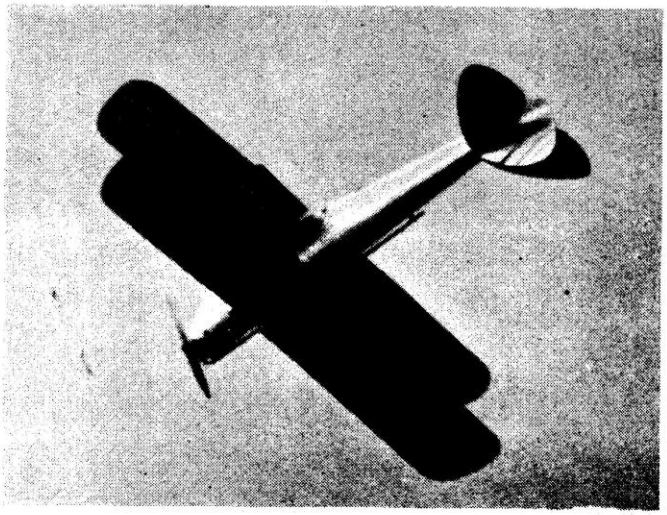

(*Flight*)

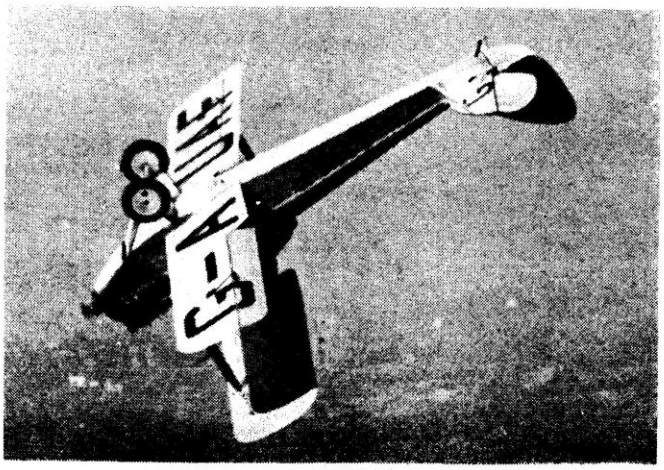

(*Flight*)

A Flick Roll (C)

Note that the elevator is hard up. The control stick is held full back while the machine rolls and is then centralized in order to straighten out

Note—The three pictures are not consecutive

Copyright Walt Peake 1975

control-stick forward on the first attempt, but afterwards upside-down flying becomes an amusing exercise.

The half loop to the inverted position is an effective manoeuvre but is more difficult (Fig. 6). To do it accurately I again recommend setting

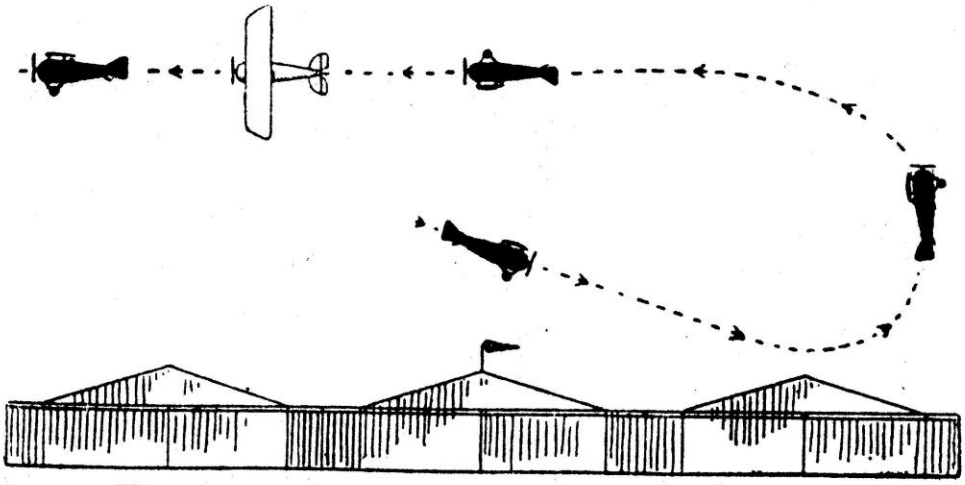

FIG. 6. A HALF LOOP TO UPSIDE-DOWN FLIGHT AND A HALF ROLL BACK TO NORMAL

the course, as in looping, by looking along one wing at the horizon. Straight flying upside-down is not very spectacular. Turns, dives, spirals, and the upside-down falling leaf (a fairly recent manoeuvre) are also needed for exhibition purposes.

RESUMING NORMAL FLIGHT. In order to resume level flight the half roll should be used at first, for, if the pilot dives out, he will find that everything " goes black " before his eyes for a moment.

The engine of most machines will run for

Copyright Wal Pelke 1973

a time upside-down without any special fuel feed.

AN IMPORTANT PRECAUTION. There is, however, one small precaution which should be taken before practising this aerobatic. Upon my first upside-down flight—in a *Camel*—I was just beginning to feel comfortable when a piece of metal flashed past my face and fell from the machine. I hastily dived out to normal flight and examined every part of the machine in sight. Nothing seemed to be missing. I afterwards found that the piece of metal was a penknife from the side pocket of my tunic.

When flying upside-down, therefore, it is inadvisable to have loose change, pencils, or penknives in open pockets.

Copyright Walt Peake 1979

CHAPTER V

THE FALLING LEAF

THOSE who imagine that with the aerobatics which have already been dealt with, flying upside-down, looping, rolling and spinning, the whole repertoire of the aerobatic pilot has been exhausted, indicate that they have never seen an exhibition by a master performer.

Indeed, looping, rolling, spinning, flying upside-down, and the " falling leaf "—which last will be discussed in this chapter—are only the bricks and mortar of aerobatics with which are built decorative designs of endless variety. There are in addition the arabesques of " crazy " flying, and the special exhibition tricks (which will be described in a subsequent chapter) which send that genuine thrill creeping up the spines of the spectators.

The falling leaf is a much-neglected manoeuvre, although it is highly spectacular. To the observer the aeroplane seems to tip over with a sharp flick first one way and then the other. Meanwhile, it falls rapidly towards the ground.

SUDDENNESS OF BANKING. The special point which attracts the attention in this aerobatic is the suddenness with which the machine tips over from one bank to the other. The effect is not at

Copyright Wal Pelke 1973

all like the progressive bank which is applied when a machine is doing an ordinary turn.

SAFE ALTITUDE. The falling leaf, like the spin, requires a good deal of air room, and the pilot first climbs to 1,500 or 3,000 feet, according to the distance he intends to allow his machine to fall.

THE CONTROL MOVEMENTS. He then shuts off his engine, and, by holding the aeroplane's nose level, reduces speed until the machine is about to stall. By then the stick is held well back. The aeroplane is tipped over to one side with the ailerons, and immediately ailerons and rudder are flung right over in the opposite direction. Instead of instantly answering the controls, the aeroplane continues to tip over in the original direction, and finally swings violently over *against* the ailerons.

It reaches a point past the vertical, and then checks and swings over in the direction in which the controls are held. Immediately this second swing has started the controls are again flung over in the opposite direction (Fig. 7).

What really happens is that the machine keeps on attempting to spin, first in one direction, and then in the other, and each time the spin is checked—chiefly by the rudder.

RESPONSIVENESS OF THE MACHINE. Most machines tip over (as shown in the diagram) more violently in one direction than in the other. Some

Copyright Walt Peake 1979

are reluctant to start the falling leaf, and can be persuaded into it only by pilots who are accustomed to them. Usually machines with sensitive

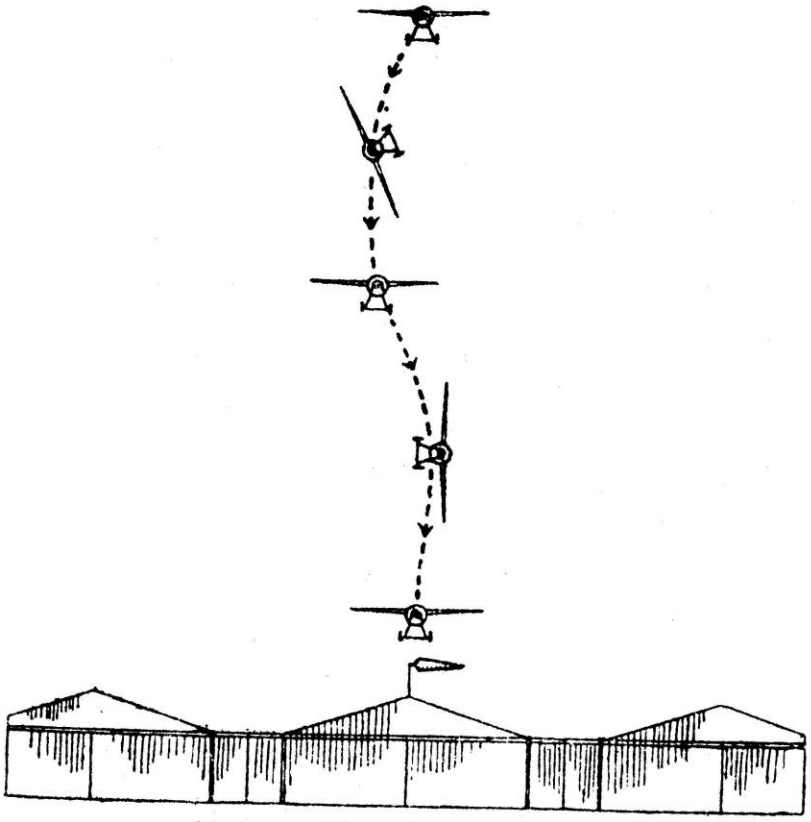

FIG. 7. THE FALLING LEAF

controls execute the most dizzy and effective falling leaf.

The *Nighthawk* occurs to me as a type which could be made to perform a very steep and effective falling leaf. Indeed, the *Nighthawk* was a machine whose quick obedience to the controls made it particularly suitable for all kinds of aerobatics. And in any critical examination of

Copyright Walt Peake 1975

a pilot's skill in "stunting," the capabilities of the machine must be taken into account.

The falling leaf, perhaps, more than any other single manoeuvre, finds out the degree of controllability of an aeroplane. It is particularly useful for judging the effectiveness of the rudder.

THE SENSATIONS. It is more difficult to describe the feelings of the occupants of an aeroplane during the falling leaf than during any other aerobatic.

One kind of motion which, in a much diluted form, gives a sensation bearing some resemblance to that given by the falling leaf is a heavily-rolling ship.

This illustration, though, takes no count of the sudden accelerations at the peak of each swing, and these provide the most exciting moments. The earth seems to come up towards the pilot with a sudden rush, which is exhilarating—or not, according to whether you are used to it.

Copyright Wal Pike 1973

CHAPTER VI

"CRAZY" FLYING

I INCLUDE in "crazy" flying flat turns, sideways flying, and side-slipping.

THE FLAT TURN. The unintentional flat turn is one of the clearest indications of bad piloting, but there is never any risk of confusing it with the intentional flat turn which is executed either for exhibition or in order to "put on the brakes," and decelerate the aeroplane preparatory to landing in a small space.

Usually the unintentional flat turn is comparatively mild, and consists in an insufficient bank for a turn of given radius. In the intentional flat turn, on the other hand, the machine remains level and, with engine still on, skids round violently.

It is performed by applying rudder and at the same time checking the machine's tendency to bank with the ailerons. Speed is immediately lost, and the well-judged flat turn is one in which the skid is exaggerated so far as possible yet without causing a stall. A kind of stable condition may be attained in the flat turn, when the machine strikes a mean between skidding and forward motion and slews round and round like Charlie Chaplin taking a corner too fast.

Copyright Wal Pike 1913

SIDEWAYS FLYING. By sideways flying I mean the aerobatic in which the machine is tilted up and over on a fairly steep bank and is held in this position, engine on, while it flies parallel to the ground (Fig. 8).

This trick is popular with spectators, but both flat turning and sideways flying must be performed

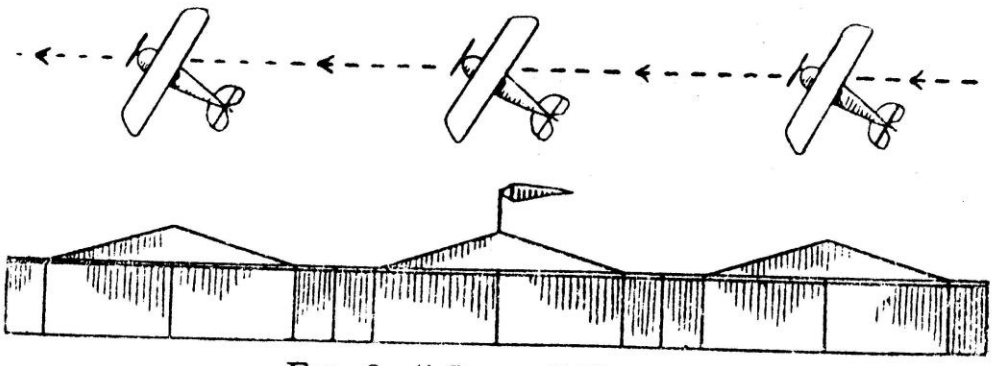

FIG. 8. "CRAZY" FLYING

close to the ground if they are to have their maximum effect.

THE SIDE-SLIP. The side-slip, because it is so common, is rather neglected by the exhibition flier. Yet well-handled it can be made exciting. A short time ago I saw a pilot execute a long side-slip with the machine held with the wings well over the vertical. It was a more effective aerobatic than many more elaborate manoeuvres, yet I had never before seen it so well done nor have I seen it so well done since. It so happened that the pilot knew how to show off that particular manoeuvre to the best advantage.

Copyright Walt Peake 1973

WHAT SUCCESSFUL " CRAZY " FLYING DEPENDS UPON. The success of all three forms of " crazy " flying depends upon degree. Performed half-heartedly, they are a nuisance ; performed vigorously and in the most extreme manner possible, they are among the most valuable of the tricks in the exhibition pilot's repertoire.

OTHER COMBINED MANOEUVRES. There remain, as forms of " crazy " flying, all manner of wild and whirling manoeuvres in which the pilots deliberately set out to break the rules.

There is, for example, a kind of mixed " Black Bottom " and " Heebie Jeebies " raised to the power of 7. The aeroplane, while switchbacking along close to the ground, alternately flat turns to right and left. There is also the trick in which one wheel and a wing tip are trailed along actually on the ground during flat turns. But the combinations and permutations of " crazy " flying are almost endless ; they are limited only by the inventiveness of the pilot. They are distinguishable from other aerobatics by one thing : the machine follows a sideways path through the air.

AIR PRESSURE. During " crazy " flying the pilot feels the air blast on the side of his face. In normal flight, of course, and during loops, rolls, spins and upside-down flights he feels it full in the face.

THE DANGEROUS TAIL SLIDE. There is one form of " crazy " flying against which a warning

Copyright Wal Pcike 1973

must be added : this is the tail slide. Tail slides rarely occur in actual practice, though they are frequently mentioned in speech and writings. I know of only one man who experimented in tail sliding, and that was the late Oliver Sutton. He stalled a Sopwith *Pup* in a vertical position, and at the last moment thrust the stick hard forward to the dash.

The machine fell straight back a short way, then dropped into a dive with a flick like a camera shutter. It was good fortune alone that allowed Sutton to get down safely, for upon landing the rudder of the machine was found to be damaged and the fin to be completely crumpled.

Recently, however, I hear that a famous foreign pilot has given exhibitions of tail sliding, so possibly, with a suitable machine, such an evolution is practicable without undue danger. At the same time so many observers confuse a steep stall with a tail slide that I should like first-hand evidence of tail-sliding before I wholly believe in it. At any rate, it is probably unwise to try it on any standard aeroplane.

Copyright Walt Peake 1975

CHAPTER VII

NEW EVOLUTIONS

AMONG these may be included the upward spin, the upside-down falling leaf, and the " double bunt " or dive to the upside-down position. All these have been introduced fairly recently.

UPWARD SPINS. The upward spin consists in either a slow or flick roll executed during a vertical climb. The manoeuvre begins with a fairly steep, engine-on dive. The machine is then pulled up until it is standing on its tail and, while in this attitude, with engine full on, it is rolled (Fig. 9).

From conversation with pilots who do this aerobatic, for I myself have not done it, I learnt that the roll is mainly effected by the ailerons, and that the chief difficulty is to distinguish when the machine is truly vertical If this is so, the system, suggested in these notes, of looking along a wing towards the horizon would be useful. By this means an exact appreciation of the machine's attitude can always be obtained.

At present the upward spin is usually done fairly high up, but if a means could be evolved (and practised) for extracting the machine safely from the manoeuvre if engine failure occurred in the middle of it, it would seem safe to start the upward spin from almost ground level.

Copyright Wal Pelke 1975

UPSIDE-DOWN FALLING LEAF DESCENT. The motions of the machine during the upside-down falling leaf are similar to during the normal falling leaf, except that they are not so violent, and the aeroplane does not tip over so far in each

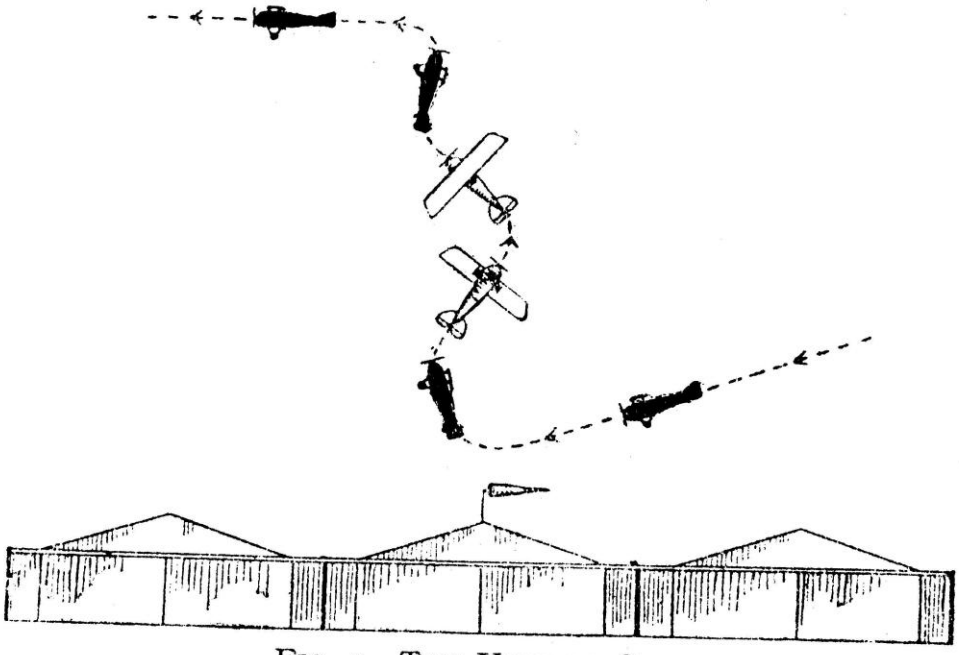

FIG. 9. THE UPWARD SPIN

direction. The machine attempts to start an inverted spin first in one direction, then in the other. The alterations in the position of the controls occur just before the "peak" of each swing.

DOUBLE BUNT. The double bunt or dive to the upside-down position was for long an almost legendary manoeuvre. It was reputed to have been done, but few people seemed to have

Copyright Walt Peake 1979

seen it done. Farnborough was said to have been the scene of the feat, and a *Bat Bantam* the machine. A pilot requires to have faith in the strength of his machine, and also in the strength of his shoulder straps, before attempting this aerobatic for the first time, although actually there is nothing very violent about it.

The machine first slows down and then turns rapidly into a dive, which becomes steeper and steeper until the vertical point is passed and the machine flattens out upside-down.

THE OUTWARD LOOP. The outward loop, which is an extension of the dive to the upside-down position is said to have been done in America and Germany. The foreign pilot mentioned in the last chapter is said to make a speciality of it. Presumably a special wing section or an enormous margin of power is required for this manoeuvre, for normally an aeroplane seems to have a poor grip on the air when upside-down, and it cannot be made to attain a steep climbing angle without stalling. For this reason big loads cannot be put on a machine while it is upside-down and consequently upside-down stunting is a safe amusement.

IS FINALITY REACHED ? The question : Have all possible aerobatics been discovered ? is often asked, and I think it is safe to say that the answer is, No. Many ideas for experiments in new aerobatics will suggest themselves to those who have made a close study of the subject. In the next

Copyright Walt Peake 1975

chapter I shall outline certain manoeuvres, never yet accomplished, so far as I know, which might be attempted by pilots flying machines suitable for such tests.

Increased machine performance and increased controllability are continually opening up new and fascinating possibilities in aerobatics, and it is likely to be many years before all possible evolutions have been discovered.

Copyright Wal Pike 1979

CHAPTER VIII

FUTURE EVOLUTIONS

IN this chapter I propose to speculate upon the fascinating subject of future aerobatics.

But first of all let me say that, even as I write, reports reach me that certain of these manoeuvres are no longer future but have actually been accomplished. I hear that the downwards "S" bend has been done, and that the outward loop has been done. However, at the time I write, these and the other manoeuvres mentioned are sufficiently rare to be classed together.

Let it be assumed that the performance of aircraft will steadily improve, and then let the possibilities of new evolutions be examined.

SUGGESTED NEW EVOLUTIONS. In a former chapter the falling leaf was described at some length. It was said that the engine was throttled down, and that the manoeuvre was started at some height from the ground. It was also said that the falling leaf was closely related to the spin.

Now we have seen that by using the engine to drag the machine along, the spin may be effected horizontally, when it is called a flick roll. Surely, by keeping the engine on, it might also be possible to execute a falling leaf, as it were, without falling?

Copyright Wal Pelke 1973

By using the controls as in the falling leaf and leaving the engine at about three-quarter throttle, it seems to me that a sensitive machine might be prevailed upon to flick violently from one bank to the other without losing height, rather in the manner of a butterfly.

I suggest that our pilots might experiment at a safe height with the " butterfly " patrol. The first move would be to adjust the machine's attitude and the amount of engine throttle opening so as to obtain a partially-stalled condition. Then the set control movements would be tried. I feel that in these circumstances *something* would be almost sure to happen, and it would be entertaining to see exactly what.

As the power of engines in scouts goes up the possibility of executing an upward " S " bend becomes less remote.

The upward " S " bend would start by the machine diving with engine on and then turning upward as in the beginning of a loop. Just before the horizontal upside-down position was reached, the pilot would push the stick forward (the engine now running at full throttle). The machine would then curve over in the top crook of the " S " (Fig. 10).

No doubt a great increase upon the power available in any machine at present in existence, or a special wing section, would be required before the upward " S " bend could be done.

Copyright Wal Pike 1979

PLATE IV

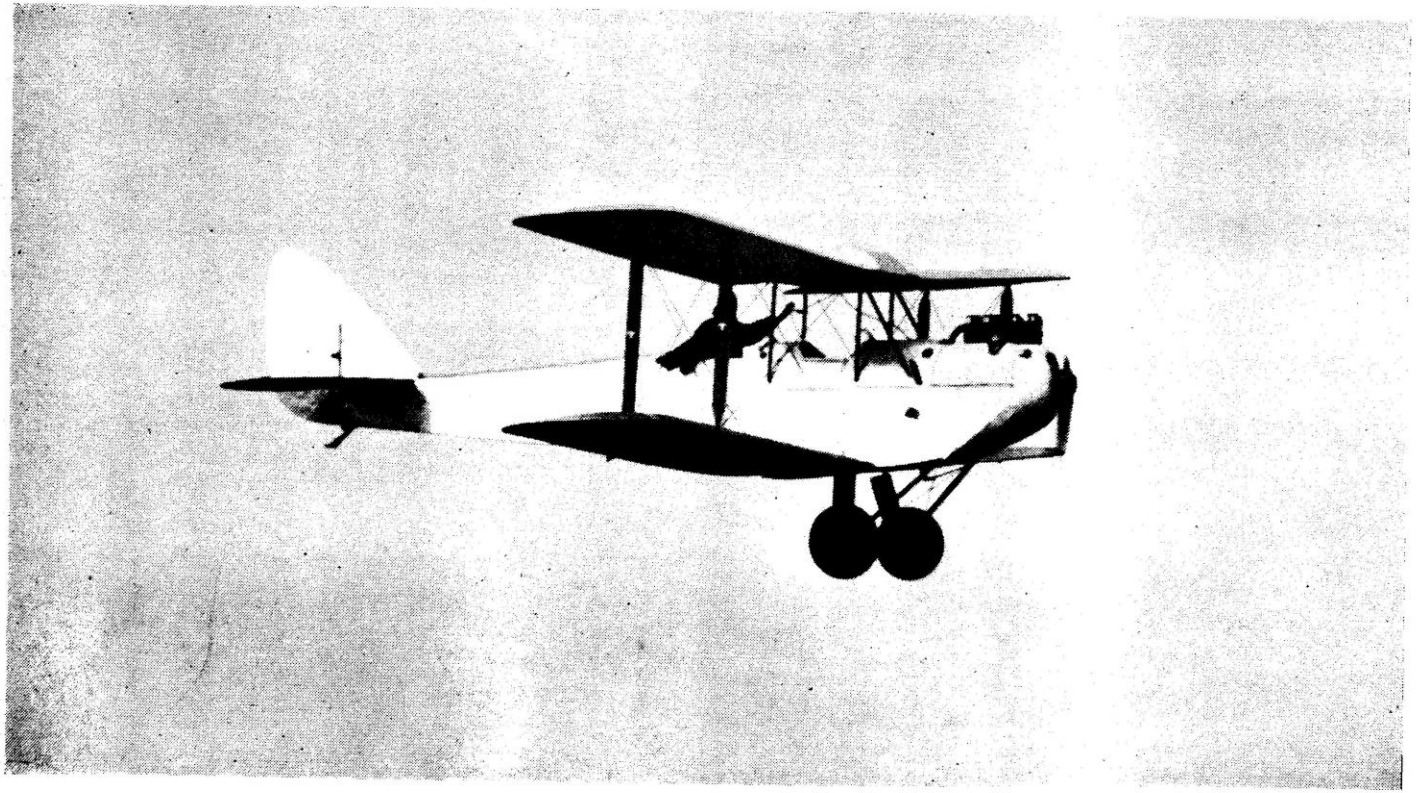

(*Flight*)

"HANDS OFF" FLYING

An effective demonstration of stability

Copyright Mary Evans Picture Library

PLATE V

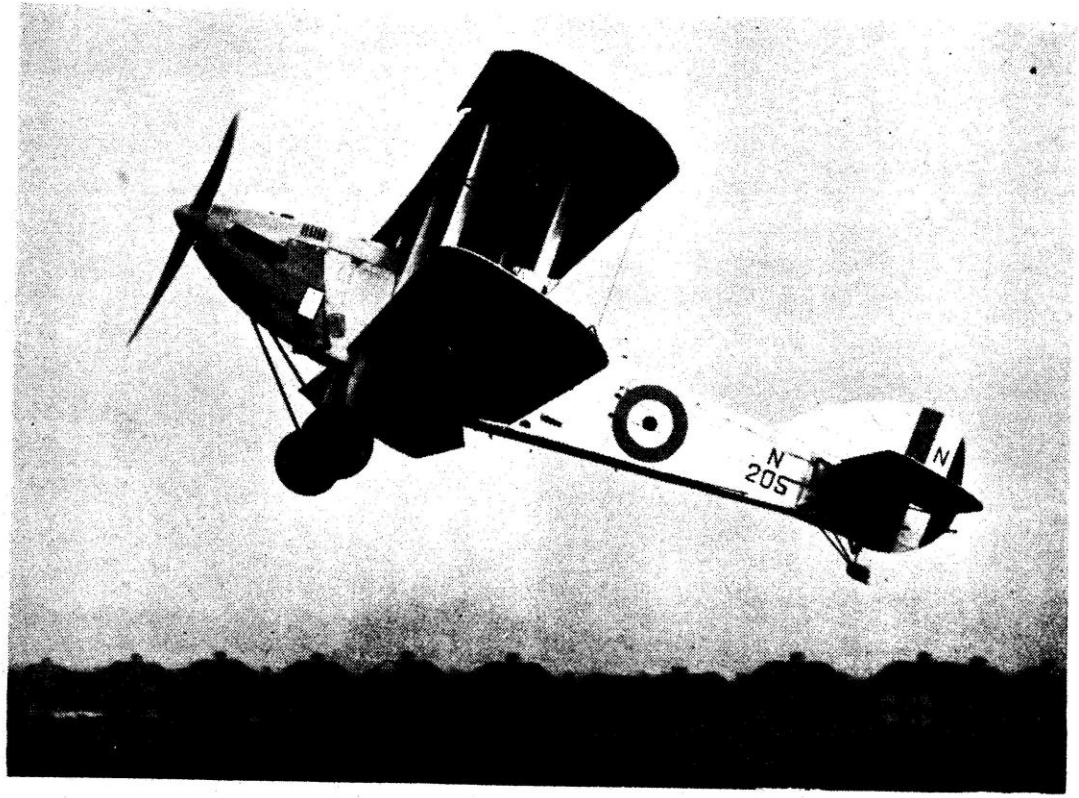

(*Flight*)

STALLED FLYING

A machine fitted with slotted wings flying stalled. The slots can be seen fully open in the leading edge of the top wing

The downward "S" bend, however, would seem to require nothing beyond the capacity of certain existing types. Having practised both the upward and downward "S" bends, the pilot

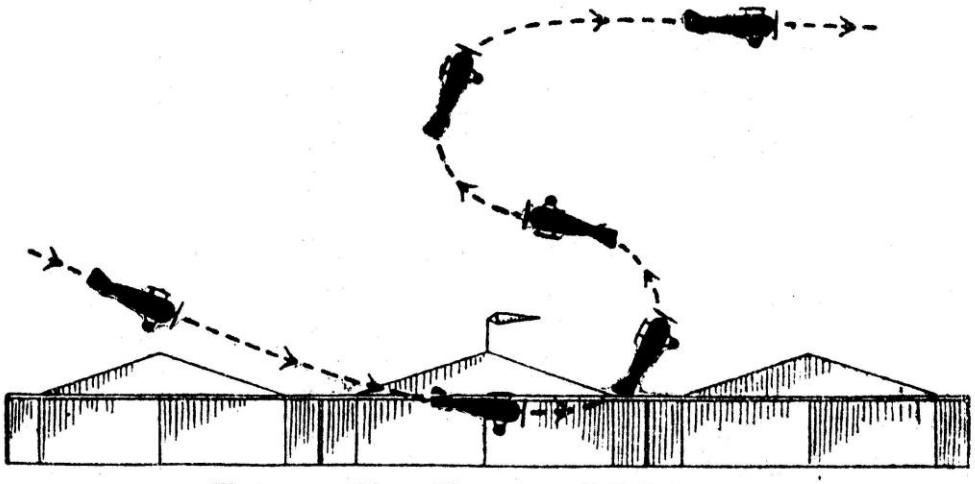

FIG. 10. THE UPWARD "S" BEND

would be able, by combining the two, to trace the figure "8" in a vertical plane.

THE EFFECT OF THE HANDLEY-PAGE SLOTS. The introduction of the automatic slot control, while it probably enables the pilot to do some new aerobatics, would seem likely to reduce his powers in certain established aerobatics. The falling leaf, for example, is aided by the drag caused by fully-depressed normal ailerons. Since, in the slot and aileron control, this drag is reduced, it would seem unlikely that a machine with this control could be made to do a falling leaf. However, this is a point upon which I have no direct evidence one way or the other. It is certain that

Copyright Wal Pike 1975

the slot and aileron control provides a pilot with new scope in " crazy " flying.

THE SPECTACULAR SIDE. All aerobatics, old and new, can be made intensely thrilling or intensely boring, according to how far the pilot has studied or failed to study the subject of showmanship.

There are many tricks which add to the spectacular value of every manoeuvre, and it is no exaggeration to say that a skilled showman can make a crowd gasp at a vertical bank, whereas another pilot cannot obtain even polite attention for an upward spin. Showmanship, therefore, will be examined in the next chapter.

Copyright Wal Pelke 1975

CHAPTER IX

AERIAL SHOWMANSHIP

THE exhibition value of aerobatics is determined by two things—the manner in which the aerobatics are performed and the position in which they were performed.

ENTERTAINING A LARGE CROWD. The manner of execution has been touched upon in the preceding chapters of this booklet ; the position will now be considered. A very large crowd cannot be entertained all at once by a single machine. The exhibition pilot should, therefore, select the enclosure or group of spectators to which he intends to demonstrate each manoeuvre, and settle the position accordingly. Each manoeuvre can be, and should be, repeated in different positions in order to entertain a large crowd.

IMPORTANT CONSIDERATIONS. Having selected the enclosure, the pilot will note the direction of the sun. He will carefully avoid allowing his machine to come between the sun and the spectators at any period during an exhibition flight. He will also avoid placing his machine directly above the heads of the spectators.

At the same time, and this must constantly be emphasized, the pilot must not go far away from the spectators.

Copyright Wal Pelke 1973

With a pilot who knows his work there is no added danger in doing the evolutions close to the spectators; but there is a limit to this closeness set by the spectators' ability to watch the machine in comfort.

A Loop from Ground Level. A loop from ground level should be begun 50 yards or so from the front of an enclosure. The machine may then be travelling parallel to the front of the enclosure or at an angle. If, however, the machine is starting the loop while coming directly towards or going away from the spectators, a rather greater distance must be allowed, otherwise the machine's upward path is followed with difficulty.

Distance from Spectators. As a general rule, the distance from the spectators increases as the distance between the lowest and highest points in the manoeuvre. A loop is, therefore, done a little farther away than a roll. A low roll, indeed, should be started five yards from the railings.

Avoiding Dullness. Immediately before and immediately after each aerobatic the machine must be flown so that it holds the interest. There must never be long pauses during which the aeroplane goes a long way away to gain height for the next stunt.

After a low loop—parallel to the railings, for example—the machine may be held down and slightly turned so that as it finishes the loop it

Copyright Walt Peake 1973

rushes past at extremely high speed a few feet from the enclosures. If the machine is still held down, a vertical bank, as the end of the enclosure is reached, will keep things going, and the machine may instantly be canted over for a "crazy" flight along in the opposite direction.

By such means the interest is maintained and worked up to a climax. The monotonous loop—pause—roll—pause—loop—pause—roll—pause, which seems to be many people's idea of exhibition flying, is an exhibition of nothing other than ineptitude.

With a modern high-performance machine there is no excuse for a moment's dullness during an exhibition flight, and even a light aeroplane can, in the right hands, put up a good performance. The aeroplane must never go far from the spectators. One turn of a spin low down is more effective than a dozen turns when time has previously been wasted and the spectators' interest lost during a long climb.

VARIETY. Another important feature of exhibition flights should be variety. If a pilot has mastered the upward spin there is no need to forget the Immelman turn or even the ordinary vertical bank. The vertical zoom—which, by letting the machine fall over into a turn at the top, can be made to appear very effective—is an exceedingly useful gap-filler. But every device known must be remembered, used and welded

Copyright Wal Pelke 1973

together if a real exhibition is to be given. The mistake made by too many pilots of forgetting old manoeuvres as soon as they have learned a new one should be carefully avoided and, if necessary, a list should be compiled.

An exhibition of aerobatics should be compressed into the shortest possible period. Many good pilots ruin their effects by prolonging their shows until the spectators' interest begins to wander. At the moment when interest is at its height the good showman lands and so leaves the audience at, so to speak, the peak of its power curve.

Copyright Wal Pike 1973

CHAPTER X

EMERGENCY AEROBATICS

It has been said that aerobatics provide the only searching test of the controls of an aeroplane, that they provide a kind of forcing house for the growth of control, and that they are good training exercises for all pilots and especially for fighting pilots. It has also been pointed out that they possess an intrinsic aesthetic value. But there is one more exceedingly important direction in which aerobatics and a thorough training in them are of great value, the direction of safety. Emergencies sometimes arise which can be adequately dealt with only by a pilot well-schooled in aerobatics. A simple instance may be given.

Forced Landings. A machine is flying up wind on a cross-country flight in bad weather. Low clouds and mist force it down to two or three hundred feet from the ground. The pilot notes here and there a possible landing ground as he passes fairly rapidly over it, but for a large part of the time there is no suitable landing ground within gliding distance. These conditions, as all English pilots will recognize, arise persistently when flying on the outskirts of London and some of the midland cities.

While flying thus the engine cuts out without

warning. The pilot, a moment before, has noticed a landing ground on the port side, which it would still be possible to reach by means of a 360° turn down wind and again into wind. The turn has to be done very low. It must be a steep, tight turn, and actually during it the field which it is the pilot's object to reach must be watched and the turn tightened up or opened out, so that the landing virtually coincides with the flattening out from the turn.

INFLUENCE OF GROUND CONDITIONS. The manoeuvre is extremely dangerous. It would be safer, if there were any kind of open space ahead, to go straight or nearly straight after the engine cut-out, to keep into wind and to make a stalled landing. But round cities there are times when possible landing spaces are sandwiched in between huge areas covered with houses, narrow streets, telegraph poles, tram wires, chimney pots, and all the paraphernalia of urban life. A crash among these odds and ends would be highly unpleasant, and the pilot decides that the risks attaching to a steep 360° engine-off turn are less than the risks attaching to a crash among the houses and people. Besides, by turning he may be able to get down safely without damaging either himself, his passenger, the people on the ground, or the machine. He decides to make the turn.

Now a turn high up with the engine running nicely and the sun shining is very different, when

Copyright Wal Pirie 1973

regarded as a problem of technique, from a turn low down in miserable weather with no engine power available. And it is quite certain that there is only one kind of pilot who could make the turn postulated in safety, and that is a pilot who has constantly and intelligently practised aerobatics both high up and close to the ground.

AIR SPEED AND GROUND SPEED. Judgment of air speed has to be carefully conserved so that it is not influenced by the visible ground speed. As the machine starts its turn down wind the pilot who is not accustomed to making vertical turns close to the ground is apt to be partly deceived by the machine's high ground speed, and to allow the air speed to fall to too low a figure. Moreover, in the conditions stated, there is a powerful temptation, to all but the aerobatic pilot, to turn with insufficient bank or, in other words, to make an unintentional flat turn with consequent loss of speed and risk of stalling. And even though the automatic slots, if the machine is fitted with them, would still enable the pilot who makes these mistakes to raise his wing and to check the incipient spin, the machine would be falling at a dangerously high rate. The slots might save the pilot's life by making the crash a " flat " crash, but they might not save him from being seriously injured.

SIDESLIP LANDINGS. This is merely one simple instance of the enormous assistance which a

Copyright Wal Pelke 1975

knowledge of aerobatics gives to the pilot in an emergency. An even more straightforward example is afforded by the popular sideslip landing. The sideslip landing is employed by almost all pilots nowadays as a means of putting their machines down exactly where they wish without resorting to engine " blipping." The important thing in the sideslip landing is to keep the nose from dropping too much. It is held up by means of the rudder, by means of both rudder and elevator, or, if the sideslip is not steep, by means of the elevator. Complete mastery of this method of losing height, combined with complete mastery of air braking by flat turns in alternate directions and " tail wagging," which is merely a series of quick, small flat turns, will enable a pilot to put a machine down in a very small field with safety

RAPID DESCENT. If a machine were at, say, 8,000 ft., and for some reason the pilot wished to land it in a field below him as rapidly as possible, the quickest method of reaching the ground would probably necessitate aerobatics. It would be to cut off the engine, force the machine into a flick roll and, by holding the controls over, to let it drop into a spin. The spin would be kept going as long as the pilot thought was safe, then at a low altitude the machine would be flattened out, pulled out of the dive, and at the same time canted over on a vertical sideslip. The sideslip would be kept going up to the moment of landing,

with alterations in its steepness to bring the machine in the right position relative to the landing ground.

The rate of vertical descent in a spin varies with the machine from about 50 to 70 m.p.h. But there is always a terminal speed, which is well below the full speed of the machine. Consequently, although a machine might descend quicker in a dive, it would flatten out with an enormous reserve of speed which would take time to dissipate. For this reason the spin down is probably the quickest form of descent from great heights.

During the war I watched a German machine I had attacked spin down without stopping for something like 15,000 ft. It then flattened out and flew home. I was lost in admiration at the way in which the pilot kept his sense of direction during so long a spin.

CHAPTER XI

USE OF INSTRUMENTS

I MENTION elsewhere that the air speed indicator can be used for discovering the speed of the machine during the glide-in preparatory to landing. This view will be regarded as a heresy by many pilots of experience. It used always to be held that a pilot should fly by feel alone; that he should estimate the air speed of his machine by the sound of the wires' passage through the air, by the "stiffness" of the ailerons, by the machine's angle as judged from the horizon, and so on.

FLYING BY FEEL. This idea has a sound basis, and there is no doubt that every pilot ought, at some time or other, to fly without instruments. Moreover, he should normally fly without instruments up to a point, inasmuch as he should form an opinion as to the machine's speed and attitude before glancing at the instrument board and not after. But having stated the general principle that the pilot should primarily judge of the movements of his machine by direct sensual perception, there is no need to go further and to prohibit him altogether from employing indirect perception through the medium of the instruments.

Copyright Wal Pike 1973

RELIABILITY OF INSTRUMENTS. Modern aircraft instruments are extremely reliable. If a pilot is frequently changing from one type of machine to another, it is not too much to say that the important instruments are no more likely to fail than the pilot's judgment. Every type of machine has its characteristic sounds and its characteristic control "feel." When the pilot has plenty of time and everything is going well, he can probably estimate without looking at instruments his air speed within about five miles per hour even on a strange machine. But in order to be able to do so, he must have had time to take that machine up to a safe height, and to stall it a few times in order to note the machine's behaviour at and around the stall. And his impressions will not have been well fixed. During aerobatics there are, as has been shown, many things occupying the pilot's attention. Consequently, it is quite possible for him, unassisted by instruments, to make a big error in estimating his aeroplane's air speed.

If he uses his instruments intelligently, if he uses them to check and support his own judgment, he will reduce to vanishing point the risk of making a big error in estimation of air speed. The average air speed indicator, as any pilot who has carried out many calibrations over a speed course will agree, is accurate and reliable. I do not hesitate to recommend its use as an ally for a large number of aerobatics.

Copyright Wal Pike 1973

USE OF THE AIR SPEED INDICATOR. For starting a loop, whether a climbing loop or a slow loop, every machine has its own most favourable speed. The pilot aims at making his machine attain this speed at the precise moment and position he intends to start the loop. Now without the air speed indicator it is exceedingly difficult to bring the machine to the desired speed at exactly the desired moment, especially, and this requires emphasis, especially during a series or closely connected programme of aerobatics. With the help of the air speed indicator, yet without relying upon it too much, the throttle can be manipulated during the dive prior to a climbing loop, for example, so that the exact speed is attained at the exact moment.

THE FLICK ROLL. For a very low engine-on flick roll again, the air speed of the machine is of immense importance, and the pilot's judgment is greatly aided and supported by the air speed indicator. It has already been mentioned that the optimum speed for the engine-on flick roll, as for other aerobatics, has to be determined by experiment at a safe height with each type of machine. In finding this optimum speed the air speed indicator is indispensable. It allows a few miles per hour to be added to or a few miles per hour to be subtracted from the speed at which the roll is started during trials, with a fairly high degree of accuracy. And having found the

Copyright Wal Pelke 1975

optimum speed for each manoeuvre it helps the pilot to stick to it.

The accurate working of the A.S.I. can, in some measure, be checked by comparing its readings with the rev-counter readings, and faults in the A.S.I. readings, when they do occur, usually seem to occur on the safe side, that is the instrument reads slow.

THE ALTIMETER. The altimeter must be treated with greater suspicion than the A.S.I. It should never in any circumstances be used for estimating heights below 300 ft. The least reliance on the altimeter for aerobatics carried out near the ground is sure to lead to trouble. This is not because the instrument is inherently unreliable, but because it is affected by changes in the weather and by lag, and because the accuracy of its smaller readings depends upon the accuracy with which the pilot has set it at zero before taking off. For low aerobatics height must be judged by eye alone. Objects, such as sheds or trees, should be looked at closely and the machine's relative height estimated from them.

For aerobatics such as a spin or a falling leaf, the altimeter is useful, although it should not be employed except for the start of the manoeuvre. The height at which the machine should be pulled out of the spin must again be estimated by eye if the spin is brought down close to the ground. I have frequently heard of pilots who have spun

Copyright Wal Pelke 1975

down quite close to the ground, and who have said afterwards that they knew when to flatten out by their altimeters. This introduces into aerobatics an unnecessary element of danger. Recovery from a spin takes about 10 seconds and anything from 250 to 1,000 ft. in height to complete.

For judging height when near the ground, therefore, the altimeter must be avoided. But it is still of great value to the aerobatic pilot for practising. Before any pilot attempts to loop from ground level, or to flick roll close to the ground, he should take great pains to see precisely how much height he gains or loses in each manoeuvre when high up. For this purpose the altimeter is useful, and every climbing loop made for practice purposes should be accompanied by careful readings of the altimeter before and after the loop.

Apart from the A.S.I. and the altimeter there is no instrument which may be said to have any special application to aerobatics. The bubble or lateral level I have never found to be of use, although theoretically it should be of value for gauging the accuracy of certain manoeuvres.

In speaking of the use of instruments for aerobatics, I must once more insist that they should be employed only as a check on, or as an ally to, the direct indications of eye, ear, and touch. No pilot should rely implicitly upon his instruments, but, used with caution, they should greatly help to increase the safety of aerobatics.

Copyright

PLATE VI

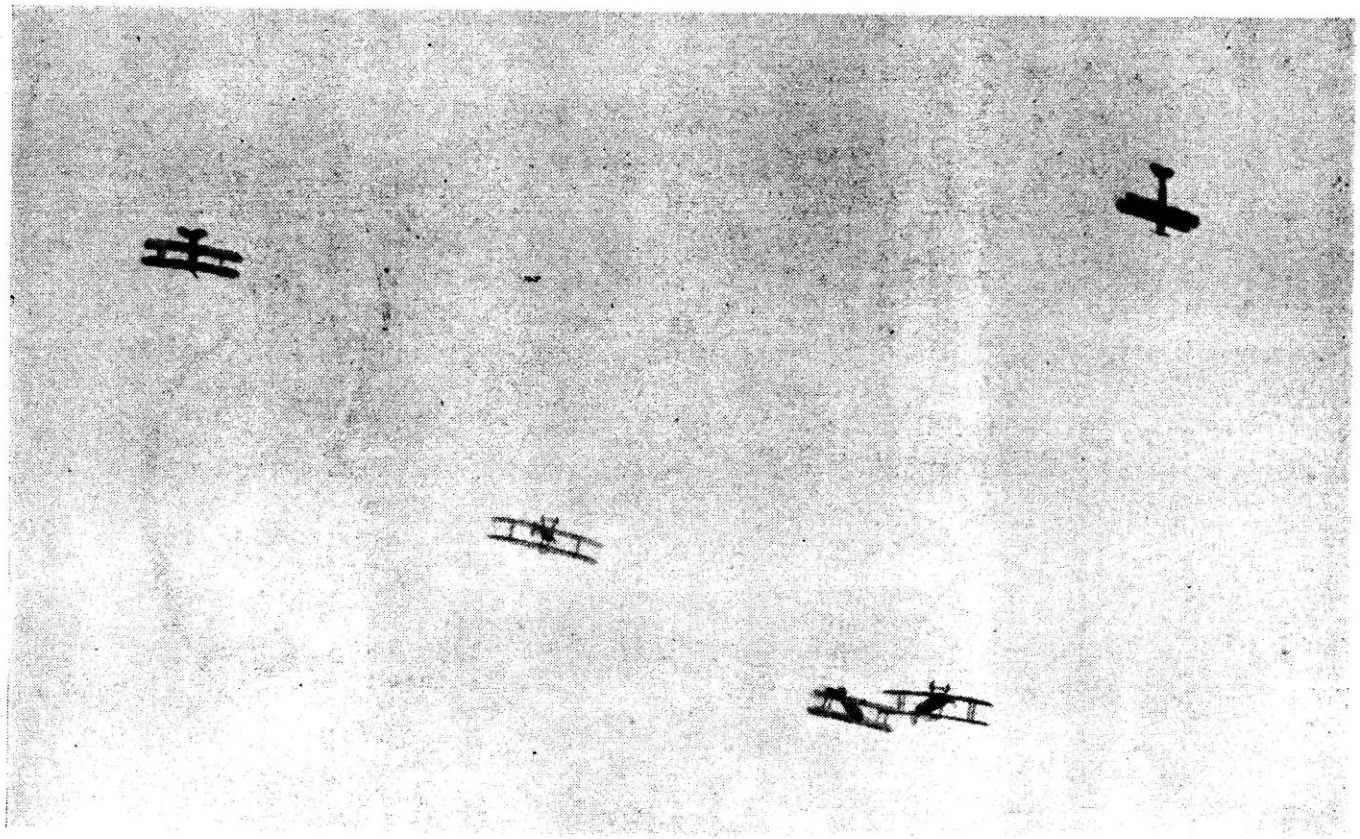

(*Flight*)

The Double Bunt

Five Moths performing the new Double Bunt together. The machine on the left can be seen half way over on to its back

PLATE VII

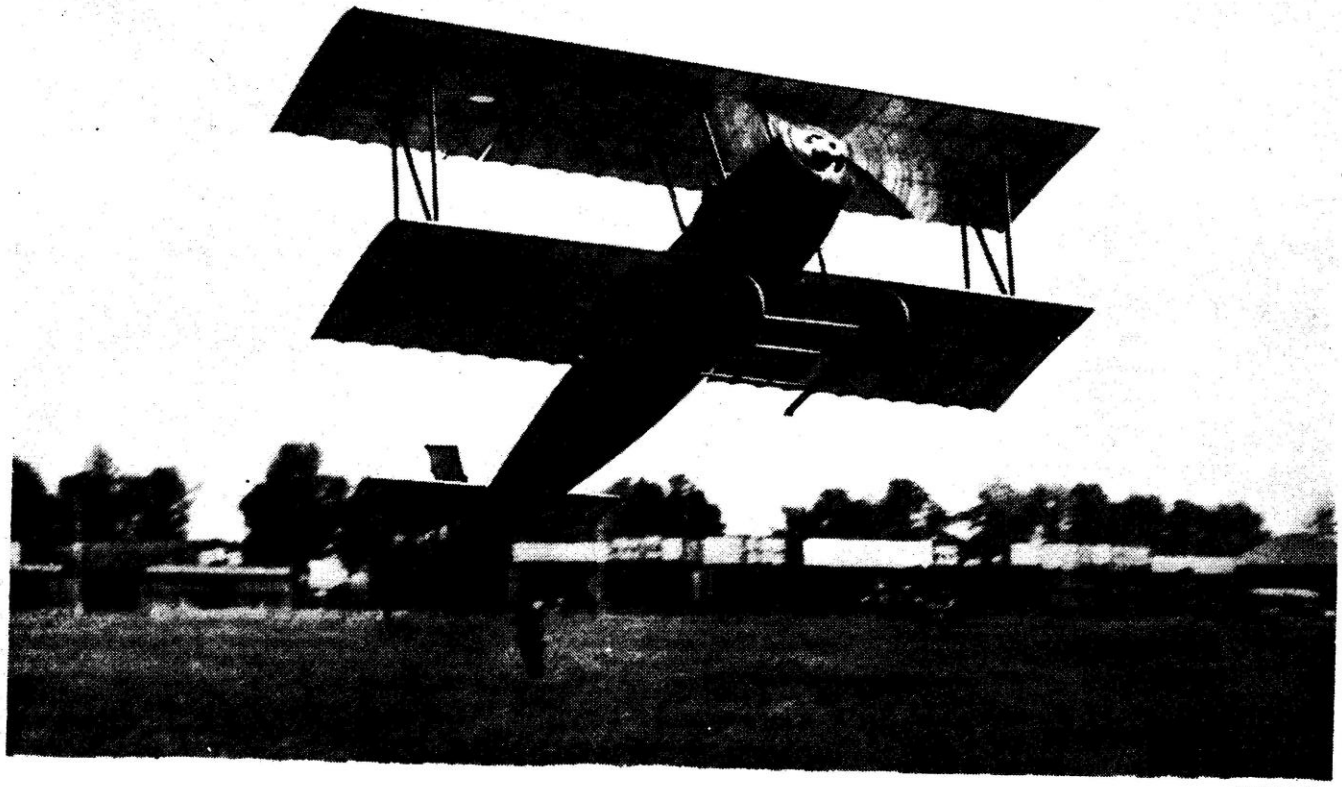

(*Flight*)

A Hoick

A Farman " Sport " being hoicked off the ground at a steep angle

CHAPTER XII

THE FINESSE OF FLYING

THERE is an often-expressed opinion about flying which is frequently misconstrued. It is usually couched somewhat in these terms—

"Nowadays flying is as easy as knitting. Anyone of average intelligence can learn to fly in six hours."

In fact, both flying and knitting are exceedingly difficult. Probably no one ever attains to complete mastery of either of them. It is true that, given good luck, it is possible, after 15 minutes' dual, to take an aeroplane up and to land it again undamaged. It is possible, after, perhaps, 15 minutes' instruction, to agitate a pair of knitting needles in such wise that there forms a befuddled wool-screen or knot-coagulation. But compare the hazardous aerial circuit of the 15-minutes' pilot with the clean and confident sweep of the more experienced pilot. Compare the hideous tanglings of the 15-minutes' knitter with the agile manipulations of the expert.

The comparisons show that there are an infinite number of degrees of craftsmanship in flying (and in knitting) and that none can say, truthfully, that he has learned to fly. The intelligent and receptive pilot never stops learning. He has

Copyright Walt Perko 1975

always in view some further step which he desires to take, some new manoeuvre or combination of manoeuvres which he wishes to try or some polishing of old manoeuvres which he hopes to effect. Indeed, the profundity of the subject of flying is one of its chief attractions.

When he has done about 200 hours solo the pilot has probably mastered the crudities or five-finger exercises of flying. He then passes to the more fascinating part; he begins to study finesse.

"HANDS." One of the main objectives in finesse is the development of good "hands." During the war there was a popular folk song about Sister Susie sewing shirts for soldiers. A member of the squadron to which I belonged, taking that song as his model, evolved (after dinner) the following reconstruction of scenes in the German training camps—

> Heavy-handed Hans flies Halberstadters,
> In handy Halberstadters for a flight our Hans
> does start,
> His "Oberst" says, "Oh! dash it,
> I'm afraid he's going to crash it,
> See how heavy-handed Hans ham-handles handy
> Halberstadts."

Ham-handedness is not often a gift of unkind fate; it is not necessarily incurable. Frequently, it can be traced to insufficient thought about the use of the controls and the small but important details of piloting.

Copyright Walt Perko 1975

For it is those details which make all the difference between bad or mediocre flying and good flying. Pilots who never seem to crash and are declared by the uninitiate to possess a special " flying sense " are merely pilots who have studied those details.

FINESSE BEGUN ON THE AERODROME. A survey of the pilot's actions from the moment his aeroplane is wheeled out on to the aerodrome will reveal many of the factors which make for finesse.

Before getting into the machine, he walks round it, making his superficial examination. There are two things that should never be missed in this examination : first, the linch-pins or bolts securing the collars which hold the wheels on the axles, and second, the inside of the fuselage behind the cockpit for stray spanners.

A lot of people have suffered damage, from broken noses to broken necks, through a wheel coming off as the machine takes the air. Landing on only one wheel can be a dangerous business. Even when the absence of the wheel has been signalled to the pilot, the most careful one-wheel landing usually ends in a quick somersault.

It is extraordinary how popular the inside of the fuselage is as a resting place for forgotten spanners. Why they get there no one knows, but there seems to be some attraction.

STRAPPING ONESELF IN. The pilot now takes

Copyright Walt Peake 1973

his seat and does up his belt. And it is an indication of how trifles may affect the finer points of flying that a loose or ineffective belt, by causing the stick to be jerked unintentionally, owing to the pilot being lifted from his seat by bumps, can gain for him a reputation for ham-handedness. Unfortunately, as I have mentioned in a previous chapter, some aeroplanes are still fitted with cummerbund contraptions in place of shoulder straps. The pilot seeking finesse should obtain a Sutton belt. He should wedge himself as far back as possible in his seat, draw the two side straps tightly over his thighs, the two shoulder straps hard down over his shoulders, and fix the conical pin. Sutton especially designed those straps so that when properly fastened they would let the pilot lean forward and look round without allowing him to rise from or to slip forward in his seat.

TESTING THE CONTROLS. Next the controls are tried. And it is necessary for the pilot to cultivate a habit of both looking at and observing the control surfaces as he moves stick and rudder bar He must consciously note the *direction* of their movement and ensure that the coupling up has been correctly done. Many accidents happen not because the pilot is unaware of this precaution, but because, after many hundreds of flights in which nothing is wrong, he goes through this checking perfunctorily.

Copyright Wal Pelke 1979

STARTING OFF. The engine having been started and run up, the chocks are waved away and the pilot looks round and memorizes the position and direction of other machines in the air. The "all clear" signals of mechanics and flight sergeants, although additional safeguards, should not be relied upon for this information.

CONFIDENCE. All these preliminary precautions are essential to finesse in flying, because the foundation of finesse is confidence. If the pilot is sure that the machine is all right and that he cannot be surprised by a fault, he is in the right mood to concentrate his entire faculties upon the physical act of flying.

DEFINITION OF "GOOD HANDS." It would be difficult to find an exact definition for the term "good hands." Perhaps it is near enough for present purposes to say that if the pilot has good hands, every movement made by his aeroplane in flight will proclaim smoothness and mastery of control. Smoothness of control must not be confused with feebleness or with timorousness of control. Refined, ladylike flying is even worse than ham-handedness.

SMOOTHNESS OF CONTROL. Smoothness of control is attained not by making every manoeuvre appear lazy and anaemic; it is attained by avoiding harshness and jerkiness. The process may be illustrated for an ordinary banked turn.

Assume that the turn is to be made as quickly

Copyright Wal Pike 1975

as possible. (I am not here referring to the time taken to round a mark, but to the actual movements of the machine.) The ham-handed pilot will jab the stick to one side. He will similarly jerk the rudder-bar, overdo it, jerk it back again, and so on. The aeroplane, if it is sensitive on the controls, will behave as if it had been kicked in the elevator or some other tender spot—which in effect it has. The ladylike pilot, on the other hand, will take time in coaxing the machine into a flabby and bourgeois bank and the turn will be a sloppy one.

The stick, when rapidity of manoeuvre is required, should be started slowly and then accelerated at the highest possible rate. The result is as quick a bank as when the stick is jerked, and there is no uncertainty or weakness in the motions of the aeroplane. A gentle start and fast, clearly defined control are required.

Smoothness is assisted by keeping all the muscles slack. A pianist could never attain both accuracy and speed in difficult passages if he allowed his muscles to stiffen. Ham-handedness in flying is often the result of nothing more than holding the stick with the arm and hand muscles contracted. All the body must be loose as the pilot sits in his machine and all his muscles must be relaxed.

Co-ordination Between Stick and Rudder Bar. Upon co-ordination between stick and

Copyright

rudder-bar, a book could be written. It is a controversial subject, which, to some extent, is affected by the type of machine and about which dogmatism is impossible. For starting an ordinary banked turn the generally taught system is that ailerons and rudder are applied simultaneously. Personally—and, as has been suggested, no more than a personal view can be expressed about the problem—I think it an error to teach pilots to apply stick and rudder-bar simultaneously. It seems to me that the stick, in normal flight, should invariably lead the way. The rudder-bar must suit its actions to those of the stick. Thus, in a normal turn, there should be an appreciable lag between the application of stick and the application of rudder-bar. Naturally, the pilot becomes, in time, unconscious of this lag, but analysis of his movements will still reveal its presence.

General Notes on the Acquisition of Finesse. Elimination of surprise has much bearing upon finesse, and, consequently, every available means should be used to anticipate emergencies such as those caused by engine failure. At first, with a type of engine new to him, the pilot intently listens to its note and marks its characteristic sound at various throttle openings. After a time, the engine's note drills itself into his head and he becomes, as it were, attuned to the sound and to the sympathetic tremor of the aeroplane.

Copyright Wal Pike 1973

Thereafter the smallest alteration in that note or tremor instantly obtrudes itself upon his notice.

The revolution counter of an engine, in which ground engineers have a pathetic faith, usually gives no indication of an engine's liability to failure. To those able to interpret them, the sound and tremor of an engine usually do give indications of liability to failure.

During the take-off, especially, the possibility of engine failure should be kept in mind, and a plan to meet the emergency should be ready. Presence of mind, it must be emphasized, is another name for prescience of mind, the habit of foresight. At each instant of the take-off the pilot should have ready prepared his exact course of action if his engine cuts out. Up to a point, and that point must be determinate, he would conform to the good old rule of going straight on, even preferring to hit a tree than to risk the usually fatal turn back down wind. But if he starts a climbing turn immediately after taking off (assuming a machine having an adequate reserve of power) he soon finds himself in a position when, after engine failure, he can turn again and land into or across wind on the aerodrome.

THE CLIMBING TURN. The climbing turn while taking off is a reprehensible manoeuvre according to some instructors. But if it is done with an adequate margin of speed it is, for most aerodromes, a manoeuvre which may increase safety

Copyright Wal Pelke 1973

It is, however, a down wind turn, and if the wind is strong and gusty the margin of speed must be high. A steady wind makes no difference to the aeroplane in flight, but sudden increases and decreases in the speed of the wind affect the aeroplane. There must, therefore, not only be the margin of speed against engine failure, but also against fluctuations in wind speed.

In spite of the " fly-by-feel-alone " school, the air speed of the machine when taking off is probably best checked by a glance at the air-speed indicator.

LANDING. When gliding in to land the pilot should not look at his altimeter. He will be sufficiently assisted in judging height by looking at the aerodrome sheds or some tall objects, such as trees or houses. The aeroplane may descend to the leeward side of the aerodrome in a series of " S " bends. As he makes his last turn, the pilot looks round once more for other machines, and glances again at the wind indicator. Changes of wind sometimes occur in a surprisingly short time, and a last glance at the indicator, seemingly a trivial precaution, is in reality important.

In the normal landing itself the ideal is a smooth alteration in the machine's attitude from tail up to tail down when it stalls and settles on the ground; wheels and tail skid simultaneously.

Copyright Walt Peake 1973

CHAPTER XIII

MACHINES

THE ideal aerobatic machine has not yet appeared, although there have been several types which approach closely to it. The qualities that are required are strength, rigidity, small size, powerful controls, a big reserve of power, and a dry sump engine.

STRENGTH. Strength is required because, although a highly trained aerobatic pilot who is in practice can perform almost all manoeuvres without loading the machine to anywhere near its factor, there come times when, in trying a new manoeuvre or in performing old manoeuvres, when slightly out of practice or, more important still, when stale, when the pilot will fail to fly fluently, and will put abnormal stresses upon the wing structure. To meet these conditions the aerobatic machine must have a load factor which will give it an ample margin of strength for the wildest manoeuvres in the worst conditions made by an incompetent pilot.

RIGIDITY. In my list of desirable qualities for the aerobatic aeroplane I have put rigidity as a separate feature. This is because there are many machines with an ample load factor yet without

rigidity in the wing structure. During aerobatics there are frequent occasions when the aeroplane is being forced through the air sideways, or when it is otherwise being made to follow an untrue flight path. On these occasions the flexible type of machine, if one may so describe it, shudders in a most horrible manner. Possibly this shuddering is not in itself dangerous. Designers of such machines assert that it is not, but at any rate it is disconcerting for the pilot and unquestionably it leads to danger. I was able to break a flying wire at any time I liked on one machine which I was putting through its official acceptance tests. All that was needed was a series of sharp sideslips and flat turns.

The wing tips, while not actually fluttering, would shudder and then a flying wire would infallibly snap. I have met two machines whose flying wires could be broken in this way almost to order. But although many flexible types show no immediate breakages, they are none the less unsuitable for throwing about. Rigidity, therefore, is a desirable quality in the aerobatic machine.

The kind of rigidity required was well illustrated in the *Nighthawk*, the *Camel* and the *Bat Bantam* and, in modern scouts, the *Blackburn Lincock*, a light fighter with excellent aerobatic qualities when not overloaded with accessories.

SIZE. Small size is another desirable feature,

although the qualification is required that if the same controllability and the same quickness on the controls could be secured in a large machine, there would be no reason against its being as successful for aerobatics as any other type. In fact, the earlier *Boulton* and *Paul* and *Avro* twin-engined machines with A.B.C. engines afforded an impressive spectacle when being looped, rolled, and flown upside down. If, therefore, the same kind of controllability could be secured in a large machine as in a small, there would be nothing particular in favour of the small machine for aerobatics. It so happens, however, that the small machine almost invariably exhibits a greater liveliness on the controls than the big one, and therefore it is the more suitable for stunting. The need of powerful controls and of a big reserve of power is self-explanatory, but it must be noted that designers and aircraft constructors have conflicting opinions of what constitute powerful controls, and the situation is further complicated by the opinions of many pilots being equally conflicting. To my mind only one kind of pilot should be listened to when the controllability of a machine is being inquired into—the aerobatic pilot.

THE TEST OF CONTROL. If a machine can do all the aerobatics that are known easily, and if it can as easily be extricated from them, that machine is controllable. And in support of this view I may

point out that the opinions as to the controllability of a machine of a large number of experienced aerobatic pilots will scarcely vary in the smallest degree. Discrepancies in the views of pilots are usually due to differences in their aerobatic flying ability. Two pilots who have flown and stunted a large number of different types of aeroplane will agree in every particular about the controllability of a new type. Failure to recognize the vital importance of aerobatics in gauging a machine's controllability have led to some appalling blunders being made in choice of machines for the Royal Air Force.

The remaining qualities needed—a big reserve of power and a dry sump engine—are only essential in the machine that is required for the whole gamut of aerobatics. Pretty exhibitions can be given by a *Moth, Avian, Bluebird* or *Widgeon,* none of which has much reserve of power and all of which are frequently fitted with wet sump engines. But the possibility of giving good aerobatic displays in these machines does not affect the truth that the ideal aerobatic machine must have a big reserve of power and a dry sump engine. There seems to be no particular reason why a water-cooled or an air-cooled engine should be chosen, although the best aerobatic machines have usually had air-cooled engines. One last point to be noted for the ideal aerobatic machine is simplicity. The pilot's cockpit should contain

nothing that is not essential. The ideal pilot's cockpit, aerobatically speaking, would have perfectly smooth black sides and would contain nothing besides seat, belt, stick and rudder bar, instruments, and petrol cocks. Oxygen apparatus, bomb dropping levers, gun gears, sights, fire extinguishers, and so on, are all potential sources of trouble to the aerobatic pilot.

Copyright Watt Perks 1979

CHAPTER XIV

THE PHYSIOLOGY OF AEROBATICS

NOTHING seems to worry people who are learning to fly more than their physical aptitude for flying and especially for aerobatics. They are continually wondering if they have the necessary " calmness " as they call it, whether they will become giddy, whether they will be able to withstand the effects of sudden changes in altitude.

Almost all these things can be found out by doctors in the consulting room. The apparatus required is a Reid reaction apparatus, a visual judgment test device, a sphygmomanometer, or device for recording the blood pressure, and an office chair. If the effects of altitude are to be studied a re-breather is also required. But, although with these instruments a man's flying aptitude can be gauged, almost anyone can train himself, even if he has not the aptitude at first, to withstand the effects of the most violent aerobatics when performed by himself as pilot. The passenger (and I find that to the novice this is a comforting fact) has a harder task to avoid giddiness or sickness during prolonged trick flying. The passenger does not know what is coming next, he cannot stop a manoeuvre just when he begins to notice that sinking feeling and, by the malice of

Copyright Wal Pike 1975

PLATE VIII

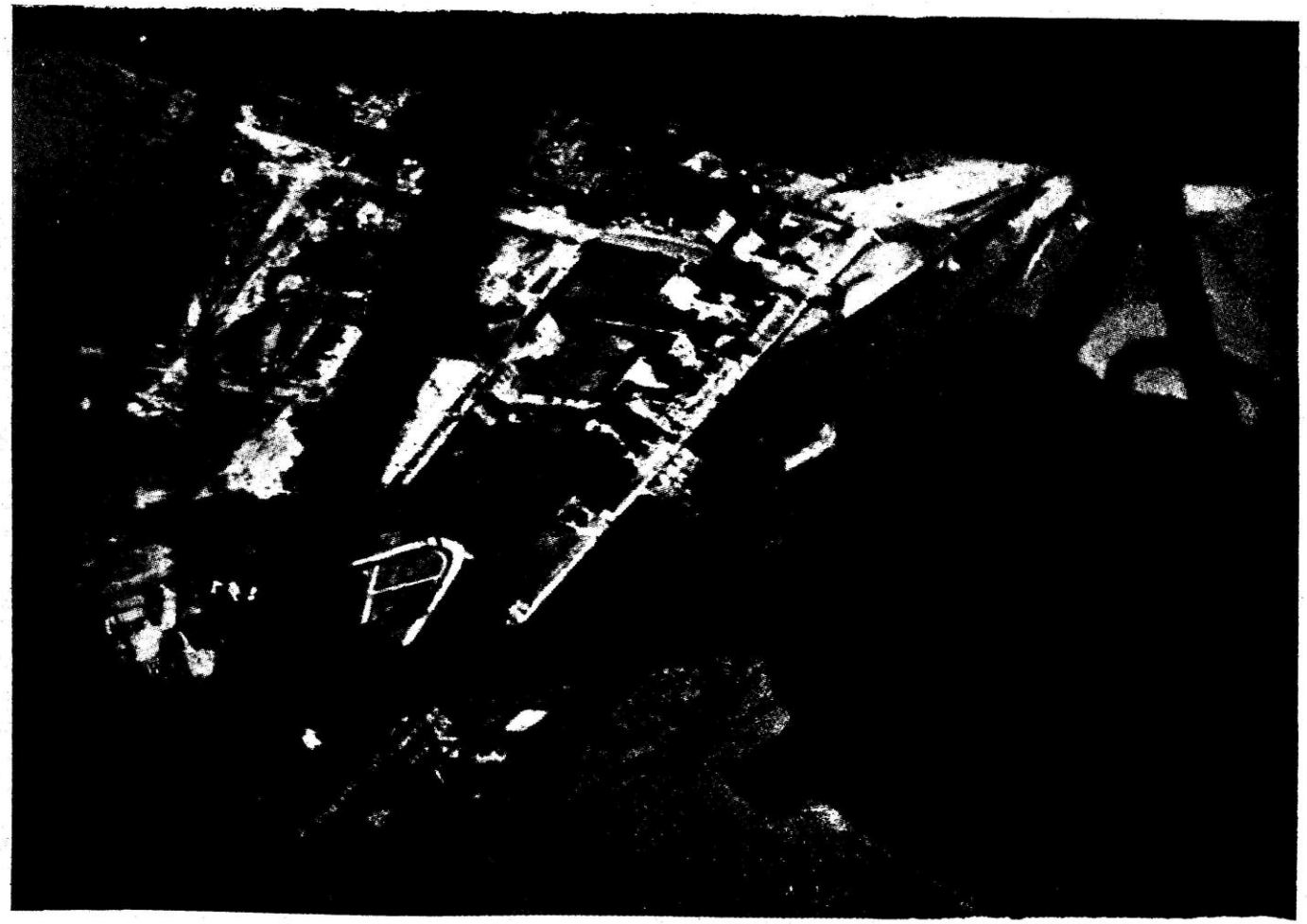

(*Flight*)

A "BOURGES" IN A SPIN

A unique photograph, which succeeds in conveying the pilot's visual impressions during this manoeuvre

fate, it always happens that a wiff of the smell of hot oil invades his cockpit at the most inopportune moment.

VISUAL JUDGMENT. The visual judgment of a pupil, which means so much in landing, can be gauged by making him look through spectacles with different coloured glasses at two superimposed bars of different coloured lights. If the pupil's visual judgment is bad, however, he need not despair of ever being able to land well. He can improve his visual judgment by a specially designed course of eye exercises.

GIDDINESS DURING AEROBATICS. Liability to giddiness or to faint during a prolonged spin or falling leaf, for example, can be gauged by measuring the pupil's blood pressure and pulse before and after spinning him round a few times in an office chair. If the blood pressure rises with a rush he is liable to giddiness, if it falls he is liable to faint. With the average good pilot the blood pressure rises slightly.

HEIGHT EFFECTS. Most aeroplane pilots understand the fundamental difference between height as it affects a person in an aeroplane, and height as it affects a person standing near the edge of the roof of a high building. Yet so many people who have not flown are afraid that they will be made giddy purely by height, that it is worth stating the facts as often as possible. Nobody, so far as I know, has ever been or ever will be made

PLATE IX

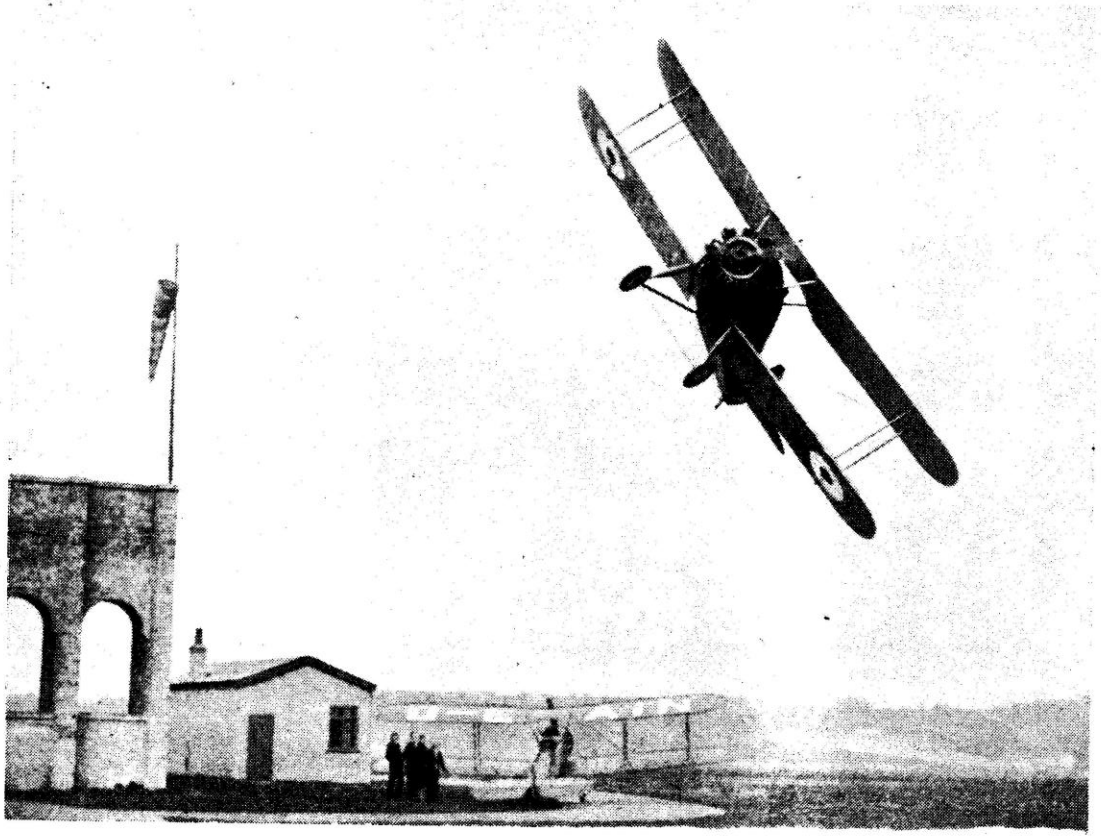

(*Flight*)

A Climbing Turn

A Hawker-Woodcock doing a climbing turn from ground level. Note—from the wind indicator on the left—that the machine is turning into wind

giddy by pure height in an aeroplane. Yet thousands are made giddy when they look down from the roof of quite a low house. The reason for the difference in the effect of height is that in the building the observer's eye measures the height by the side of the building stretching between him and the ground. This link with the ground, not pure height, is what causes giddiness. In a captive balloon height sickness is not experienced at all by the novice, unless he looks down the cable to the ground. The cable provides the link with the ground and at once provokes giddiness.

OXYGEN WANT. In an aeroplane, therefore, no one need fear that they will become height sick. The effects of altitude and sudden changes in altitude are not comparable with, and must not be confused with, the kind of height sickness just mentioned. They are due to oxygen want or to alterations in the pressures acting on the ears. For normal aerobatics no effects from altitude are experienced. If a very long spin is being made, however, it is useful to adopt the usual tricks for descending from a height; that is, to swallow occasionally, to hold the nose and blow, and to move the lower jaw forward so as to clear the eustachian tubes and equalize the pressure on the ears.

If a pilot wishes to go in for aerobatics but is uncertain of his physical fitness to do so, he can always be examined by a competent doctor who

can estimate his fitness fairly accurately. The majority of the physiological tests used in the R.A.F. were evolved by Group-Captain Flack, who is head of the Air Ministry's Medical Research Department, and they provide a very sure and complete means of judging flying aptitude and the ability to perform the most violent aerobatics without evil results.

Copyright Walt Peake 1975

APPENDIX

THE following series of diagrams is extremely helpful in showing the position of the controls during various manoeuvres.

FIG. 11.

EXPLANATORY DIAGRAM FOR SHOWING CONTROL MOVEMENTS

The pilot's cockpit is given diagrammatically in plan. The large circle shows the limits of travel of the top of the control stick. The black blob shows the actual position of the top of the stick, and the small circle shows the position of the top of the control stick immediately before the movement was begun. The travel of the top of

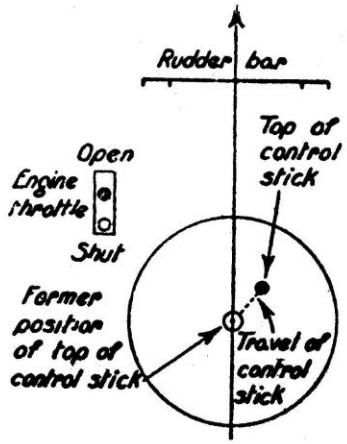

the stick is shown by the dotted line. The small dot is the centre of the large circle. In the above diagram therefore the throttle has been opened and the stick moved forward and to the right from a central position. It is important to note that there are wide differences in the control movements required by different machines for the same manoeuvre; consequently, no diagram of control movements can give more than an approximate illustration of the pilot's actions. Moreover, it is an undoubted fact that different pilots perform the same manoeuvre by slightly divergent methods. These diagrams are not intended to do more than give a general indication of the movements required for aerobatics for a machine of average controllability.

©Copyright Wal Pelke 1975

FIG. 12.
CONTROL DIAGRAMS FOR FLICK ROLL

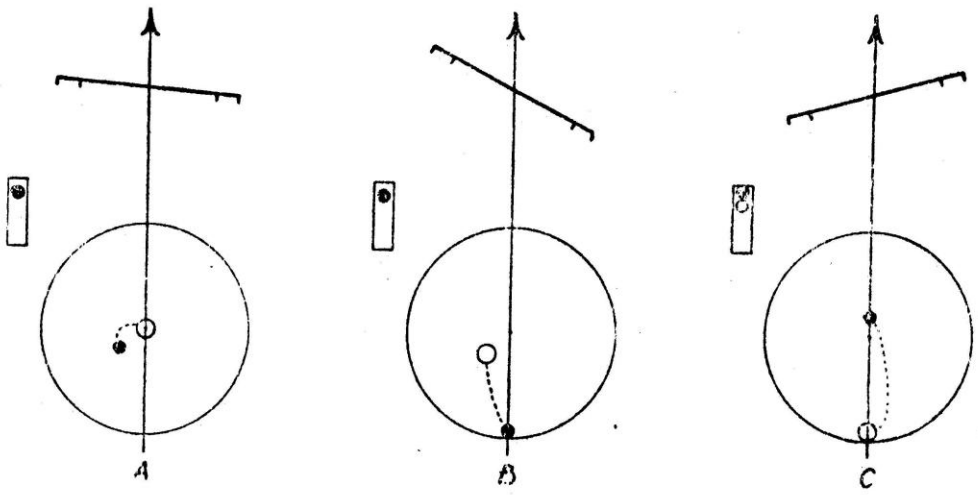

A. INITIATING THE ROLL. Left aileron and stick beginning to move back. Left rudder. Engine at about four-fifths throttle.

B. DURING THE ROLL. Stick full back and rudder hard over. (Some machines like aileron as well.) Engine throttle remaining about four-fifths open. With controls in this position machine will complete a flick roll. (Compare spin diagrams.)

C. FLATTENING OUT. Stick forward and opposite rudder. Engine throttle fully opened to prevent loss of height. These motions are made immediately the machine has completed the roll. For a half roll these motions are made when the machine is upside-down.

FIG. 13.
CONTROL DIAGRAMS FOR CLIMBING LOOP

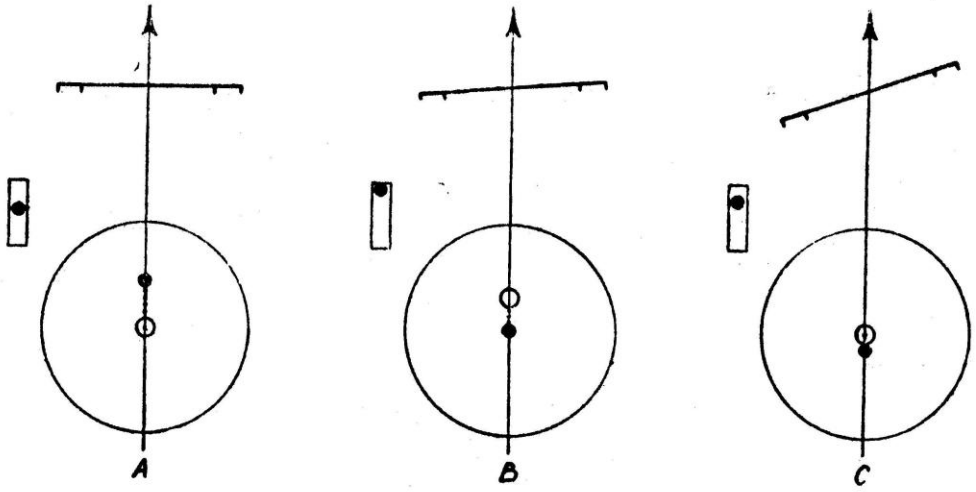

A. PRELIMINARY DIVE. Throttle two-thirds open, stick held forward.

B. VERTICAL CLIMB. Throttle fully open. Stick eased gently back to about central position. A touch of right rudder.

C. OVER THE TOP. Stick slightly back. More right rudder. Throttle four-fifths open. The amount and direction of rudder and of aileron required for a perfect loop depend upon the machine type. They can best be determined, as recommended in the text, by the pilot looking along a wing at the horizon during the entire manoeuvre.

FIG. 14.
CONTROL DIAGRAM FOR RIGHT-HAND FLAT TURN

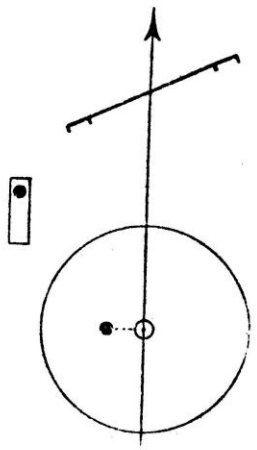

Hard right rudder. Machine is prevented from automatically banking to the right by an application of left aileron.

Copyright Wal Pike 1979

FIG. 15.
CONTROL DIAGRAMS FOR LEFT SIDESLIP

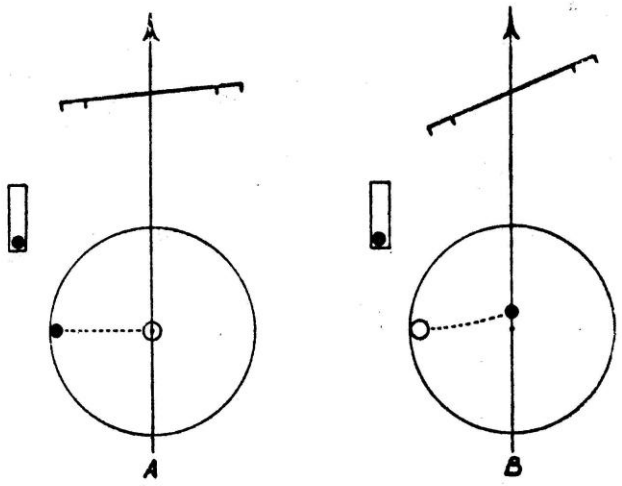

A. Throttle back. Hard left aileron.

B. Stick central and forward. Right rudder to hold the nose up.

Copyright Walt Peake 1979

FIG. 16.
CONTROL DIAGRAMS FOR LEFT-HAND VERTICAL TURN

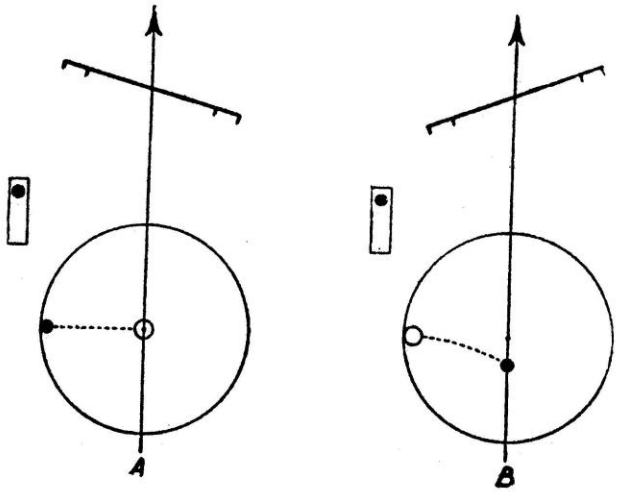

A. PRELIMINARY MOVEMENT. Hard left aileron and a little left rudder. Throttle four-fifths open.

B. DURING THE TURN. Stick central and slightly back. The radius of the turn is determined by the amount the stick is pulled back. If it is pulled too much back, however, machine can be stalled on the turn. Right rudder is applied to keep the nose up.

FIG. 17.
CONTROL DIAGRAMS FOR SPIN

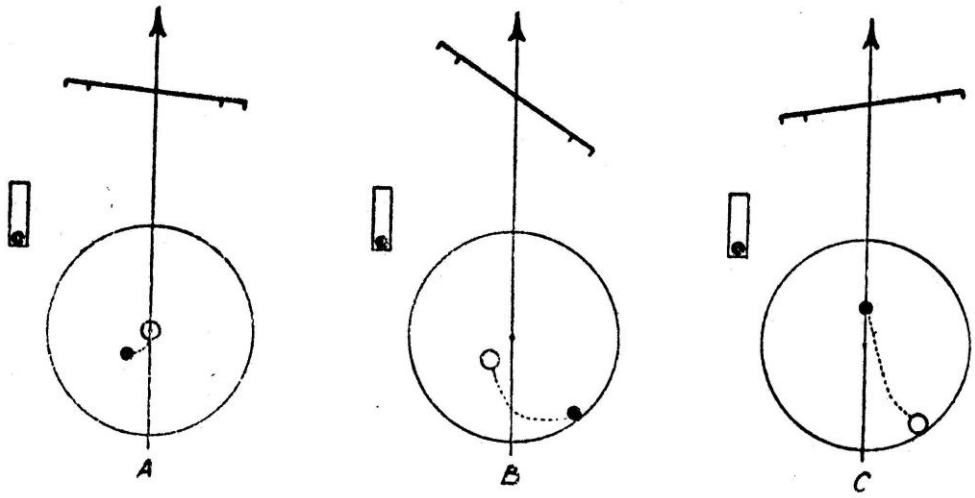

A. STARTING THE SPIN. The engine is shut off and the stick eased back and to the left. Rudder is gradually applied.

B. DURING THE SPIN. Stick hard back and to the right (opposite aileron usually, but not always, gives the fastest spin. In a machine with wing slots it may stop the spin). Rudder hard over to the left. The machine will continue spinning while the controls are held in these positions, the time of each turn being about 2½ seconds, and the angle of incidence anything from 30 to 50 degrees.

C. FLATTENING OUT. Stick is eased straight forward. Rudder bar is centralized or a little opposite (right) rudder is applied. The machine will cease spinning and go into a dive.

FIG. 18.
CONTROL DIAGRAMS FOR FALLING LEAF

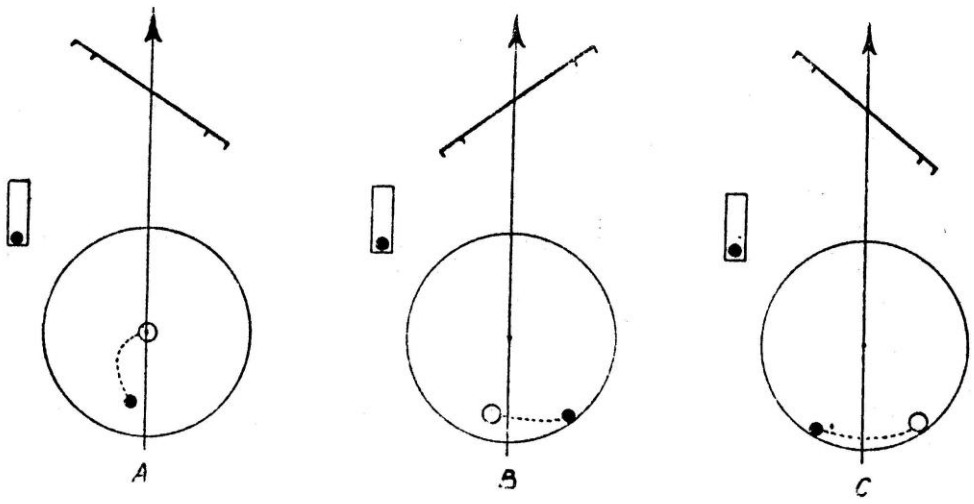

A. PRELIMINARY STALL. Stick is eased back and rudder applied. Machine stalls and flops over to the left in beginning of a spin. Engine throttle closed.

B. CHANGE OVER. At a moment, which can only be discovered by trial with any given machine, controls are flung over to this position. Stick back and to the right. Hard right rudder. Machine will hesitate then swing sharply over to the right.

C. SECOND CHANGE OVER. Again at the critical moment controls are flung over to this position. Machine is flattened out by centralizing controls and putting the nose down.

INDEX

A.B.C. ENGINES, 60
Aerobatics, effect of on pilot and passenger, 63
——, finality in, 29
——, height of, 9
——, list of, 38
——, personal comfort during, 15
——, pilots skilled in, 60
——, position and manner of, 35, 36
——, practice of, 15
——, value of, 1
Aeroplane, standard, 26
Abnormal stresses, 58
Ailerons, stiffness of, 44
Air braking, 42
—— -cooled engines, 61
—— pressure, 25
—— speed and ground speed, 41
—— —— indicator, 44, 46
—— —— ——, checking, 47
Aircraft, performance of, 31
Altimeter, 47, 57
Altitude, changes in, 63
Armstrong, Captain, 9
Autorotation, 9
Avian, 61
Avro, 60

BANKED turn, 53
Bat Bantam, 14, 29, 59
" Blipping," engine, 42
Blood pressure, 64
Bluebird, 61
Bomb-dropping levers, 62
Boulton and Paul, 60
Bubble, 48

" CALMNESS," 63
Camel, 9, 18, 59
Captive balloon, 65
Climbing loop, 2, 4
—— turn, 56
Coloured lights, 64
Combined manoeuvres, 25
Confidence, 53
Controls, harshness on, 16
——, liveliness of, 60
——, powerful, 60
——, smoothness of, 53
——, test of, 60
Co-ordination between stick and rudder, 54, 55
Course, checking during loop, 5
——, how to set, 17
Crash, condition for, 40
Crazy flying, 19, 23–26
—— ——, degrees of, 24, 25
—— ——, *Handley-Page* slots in, 34

DANGER, element of, 48
Diving, 12
Double bunt, 28
Downwards " S " bend, 31, 33
Down-wind turn, 40
Dry sump engines, 61
Dullness, avoidance of, 36

Copyright Wal Pelke 1973

EMERGENCY aerobatics, 39–43
Engine-off loop, 3
Engine, use of during crazy flying, 24
—— —— roll, 7
—— —— spin, 14
—— —— upside-down flying, 17
Estimating height by eye, 47, 57
Eustachian tubes, 65
Exhibition tricks, 19

FALLING leaf, 19–22, 31
—— ——, altitude for, 20
—— ——, control movements in, 20
—— ——, effect of slots in, 33
—— ——, sensations in, 22
—— ——, upside-down, 28
Farnborough, 29
Fin, 26
Fire extinguishers, 62
Flack, Group-Captain, 66
Flattening out from spin, 12
Flick roll, 6, 7, 31
—— ——, A.S.I. in, 46
—— ——, checking a, 8
—— ——, optimum speed for, 46
—— ——, pilot's technique, 8
Flat turn, speed during, 23
—— ——, stall during, 23
—— ——, use of ailerons in, 23
Flying aptitude, apparatus for testing, 15, 63
—— by feel, 44
——, degrees of craftsmanship, 49
Flying finesse, 49–57
—— sense, 51
Forced landings, 39

GIDDINESS, 63, 64
Ground conditions, influence of, 40
—— examination, 51
Gun gears, 62

HALF-LOOP to inverted position, 17
Half-roll, 7
—— from top of loop, 8
—— on to back, 16
" Ham-handedness," 50
Handley-Page slots, 13, 41
—— —— ——, effect of in aerobatics, 33
" Hands," 50, 53
Height effects, 64
High performance, 37
Horizontal spin, 8, 9, 31

IMMELMAN turn, 37
Instruments, care in use of, 48
——, reliability of, 45
——, use of for aerobatics, 44–48
Interest, maintenance of, 37
Inventiveness, 25

JUDGMENT, error of, 9
——, pilot's, 45

LANDING, 57
Large machines, 60
Lincock, 59
Load factor, 58
London, flying conditions around, 39
Longerons, 16

Copyright Wal Pyke 1973

Long spin, 65
Looping, 2–5
——, automatic, 5
——, use of A.S.I. during, 46
Low stunting, 10

MACHINES, 58–62
——, capabilities of, 22
——, new types of, 13
——, strength of, 29
Moth, 61

NEW evolutions, 27
Nighthawk, 21, 59
Normal flight, resumption of, 17

OUTWARD loop, 29
Oxygen apparatus, 62
—— want, 65

PERFORMANCE, 30
Physiology, 63–66
Power, 32
Practice, 57
Pressure on the ears, 65

R.A.F., 61, 66
Rapid descent, method of, 42
Rate of descent in spin, 43
Reid reaction apparatus, 63
Reserve of power, 61
—— of speed, 43
Responsiveness of machine, 20
Revolution counter, 55
Rigidity, 58
Roll, direction of, 7
——, double, 7
——, speed for, 6
Rolling, 6–9
Rudder, effect of in falling leaf, 20

SEAT bearers, 16
Sensitive controls, 21
Shoulder straps, 15, 52
—— ——, adjusting, 16
Showmanship, 34–38
Sideslip landings, 40
Sideslipping, 23, 24
——, over the vertical, 24
Sideways flying, 24
Simplicity in design, 61
Siskin, 5
Size of machine, 59
Slow loop, 3
—— roll, 6
Sopwith Pup, 26
Spectators, distance from, 35, 36
Speed course calibrations, 45
Spin, converting flick roll into a, 14
——, fast, 14
——, inverted, 13
Spinning, 12–14
Spinning, beginning, 11
——, control positions, 11, 13
Stick movements of, 32
Strapping in, 51
Strength of machines, 58
Sun, direction of, 35
Sutton, Oliver, 26
—— straps, 16, 52
Swallow 5

TAIL slide, 25
—— "wagging," 42
Take off, 56
Testing controls, 52
Trouble, sources of, 62

UPSIDE-DOWN flying, 15–18
—— ——, attitude of machine while, 16

Copyright Wal Pike 1973

Upside-down flying, dive to, 23
—— ——, engine-on during, 16
—— ——, falling leaf, 17
—— ——, gliding angle in, 16
—— ——, loads during, 29
—— ——, methods of beginning, 16
—— ——, spirals, turns and dives in, 17
Upward spin, 27
—— ——, height of, 27
Upward spin, use of engine in 27
—— " S " turn, 32
Use of stick, 54

VARIETY, 37
Vertical bank, 37
—— zoom, 37
Visual judgment, 64

WATER-COOLED engines, 61
Widgeon, 61
Wind, effect of, 56
Wing structure, 58

PRINTED IN GREAT BRITAIN AT THE PITMAN PRESS, BATH
B8—(5507)

Copyright

LODGE

SPARKING PLUGS FOR AIRCRAFT ENGINES

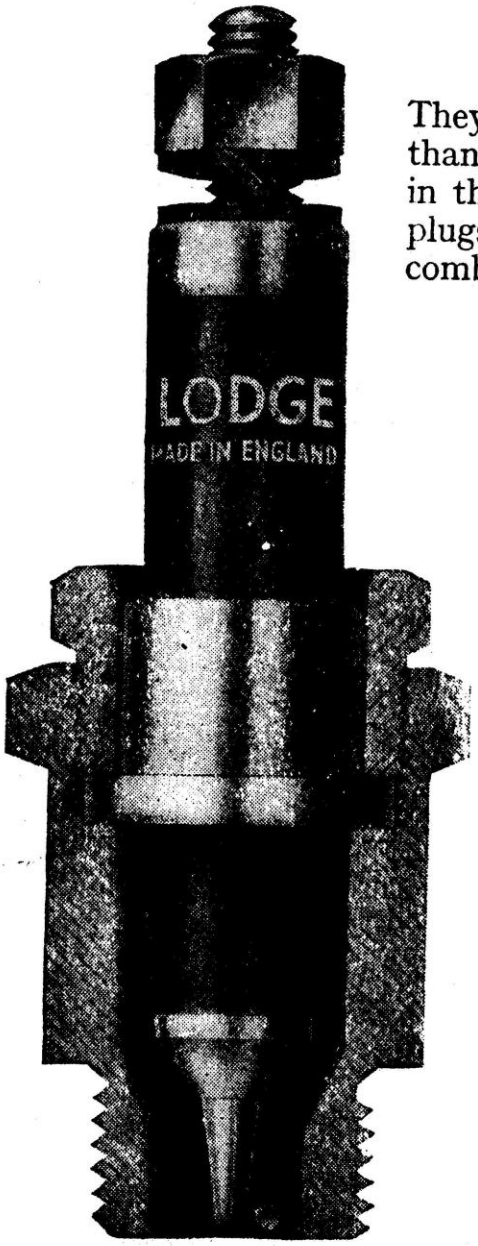

They are the outcome of more than twenty years' experience in the manufacture of ignition plugs for all types of internal combustion engines.

LODGE AIRCRAFT PLUGS

Model A20 . . **11 mm. reach**
Model A21 . . **18 mm. reach**
(Suitable for medium compression engines)

Model A30 . . **11 mm. reach**
Model A31 . . **18 mm. reach**
(Suitable for both medium and high compression engines)

Descriptive leaflet and dimensioned blueprint on request to—

LODGE PLUGS LTD.
RUGBY, ENGLAND
(On A.I.D. Air Ministry approved list)

Copyright